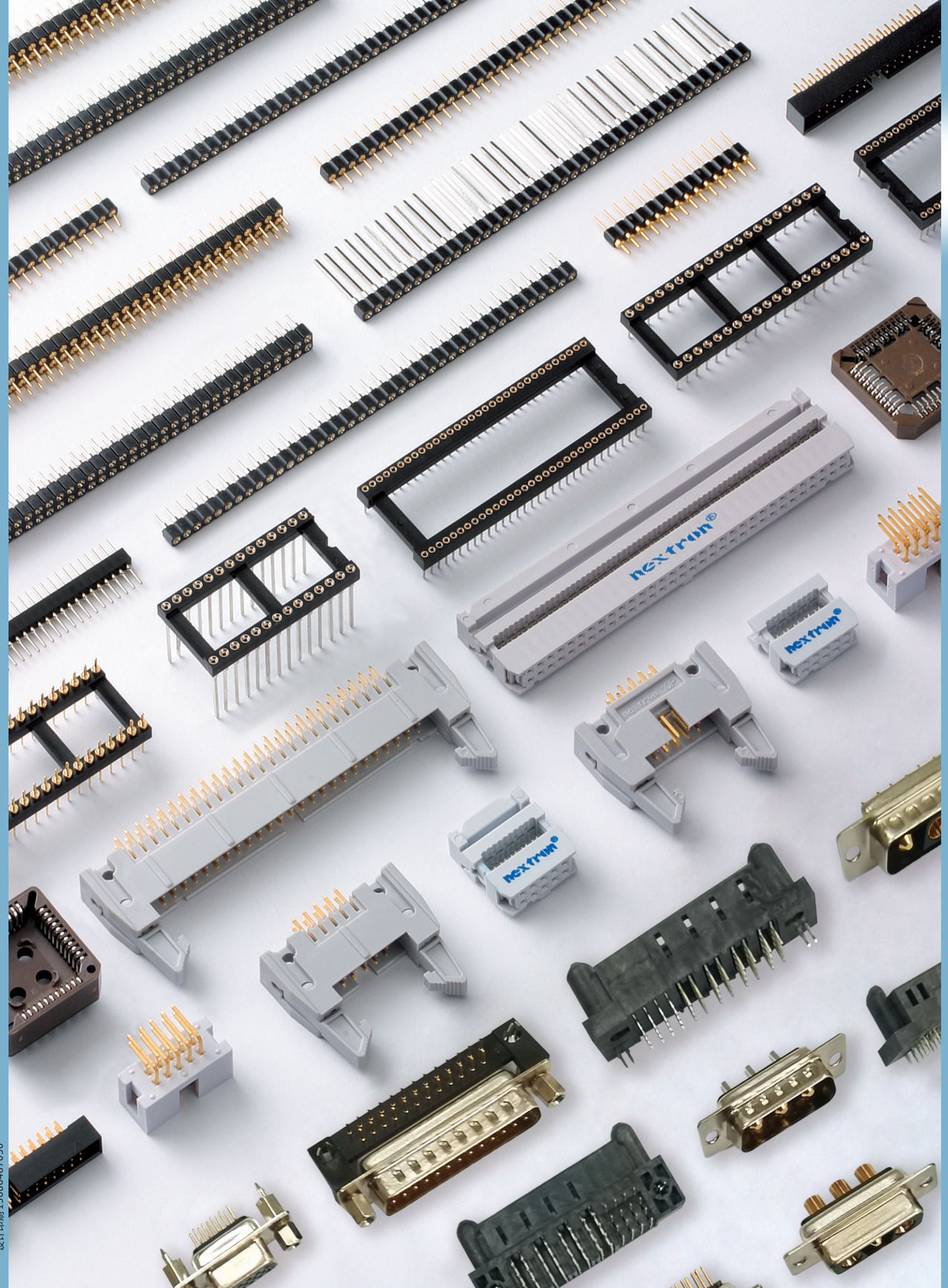

nextron®
Turnkey Manufacturing Service

P.C.B Mount
Cable Monut

nextron®
Nextronics Engineering Corp.

Taipei,Taiwan(Head Office)
Nextronics Engineering Corp.
2F. 31 LANE 169 KANG NING STR. Hsi
Chih Taipei Hsien, Taiwan, R.O.C.
Tel: 886-2-6616-2000
Fax: 886-2-8695-1177
E-mail: sales@nextron.com.tw

Guangdong,China(Shenzhen Factory)
ShenZhen junHao Engineering Co.,Ltd
No.23Gaoerfu Road ,Niuhu Community, Guanlan street,
Longhua District, Shenzhen, CHINA
Zip Code：518110
Tel: 86-755-2161-8818 2605-2427
Fax: 86-755-2642-6035
E-mail: sales@jhjm.cc
http://www.jhjm.cc

设计印刷13686487050

Rev.2407

中國・廣州公司

中國・深圳公司

nextron®

Turnkey Manufacturing Service

nextron®

Table of Contents

P.C.B Monut (Page01-50 , 76-135)

Cable Monut (Page51-75)

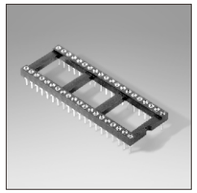

100 Series
Open Frame-Standard
Page 01

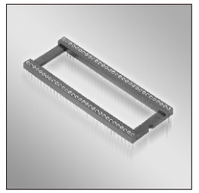

100 Series
Open Frame-High density
Page 02

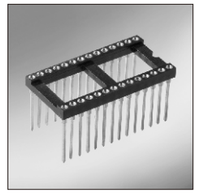

101 Series
Wire Wrap Termination -Open Frame
Page 03

103 Series
Ultra flat - Low Profile
Page 04

104 Series
High Density Strips
Page 05

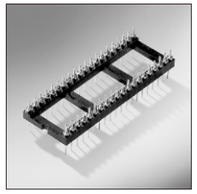

111 Series
Male Header-Interconnect
Page 06

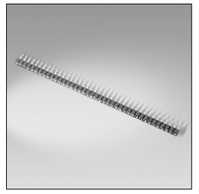

120 Series
Standard Strip
Page 07

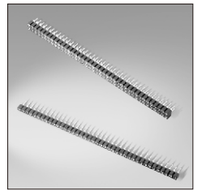

120 Series
High Density Strips
Page 08

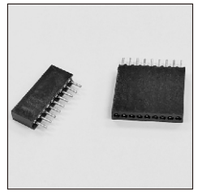

121 Series
Standard Strip
Page 09

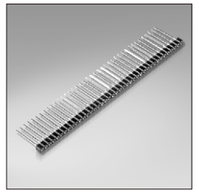

122 Series
Wire Wrap Termination -Strip type
Page 10

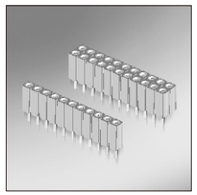

123 Series
High Profile Strips
Page 11

124 Series
High Density Strips
Page 12

126 Series
Straight Terminals
Page 13

127 Series
High Density Strips
Page 14

127 Series
High Density Strips
Page 15

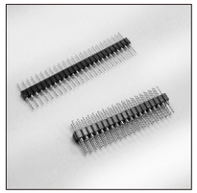

128 Series
High Density Strips
Page 16

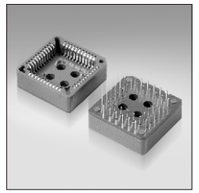

150 Series
Chip Carrier Socket - PLCC DIP
Page 17

151 Series
Chip Carrier Socket - PLCC SMT "S"
Page 18

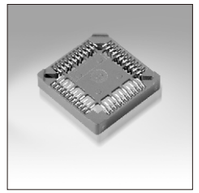

151 Series
Chip Carrier Socket - PLCC SMT
Page 19

178 Series
High Density Strips
Page 20

nextron®

Tel: +86-755-2605-2427 Fax: +86-755-2642-6035 Email:sales@jhjm.cc Internet: http://www.jhjm.cc

nextron®

P.C.B Monut (Page01-50 , 76-135)

Table of Contents

Cable Monut (Page51-75)

208 Series
Pin Headers Single Row
Page 21

210 Series
Pin Headers Dual Row
Page 22

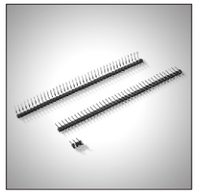
211 Series
Pin Header Single Row
Page 23

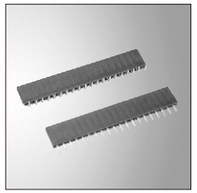
212 Series
Female Header,
Single Row,
Page 24

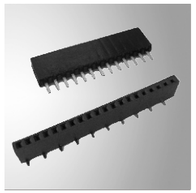
212 Series
Female Header,
U Type Single Row,
Page 25

213 Series
Pin Header Dual Row
Page 26

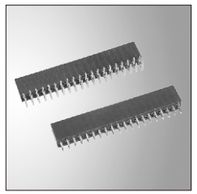
214 Series
Female Header,
Double Row,
Page 27

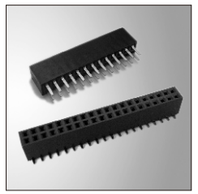
214 Series
Female Header,
U Type Double Row,
Page 28

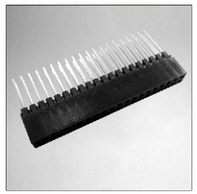
214 Series
PC 104
Page 29

214 Series
Female Header,
Double Row,
Page 30

214 Series
Female Header,
Double Row,
Page 31

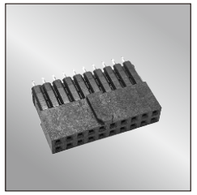
214 Series
Female Header,
Double Row,
Page 32

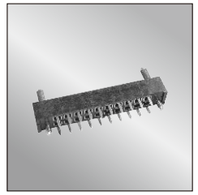
214 Series
Female Header,
Double Row,
Page 33

214 Series
Custom connector
Single Row
Page 34

230 Series
Headers With Ejector
Page 35/36

230 Series
Headers With Ejector
Page 37/38

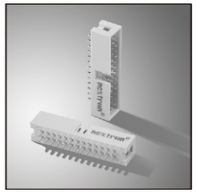
231 Series
Box Header
Page 39

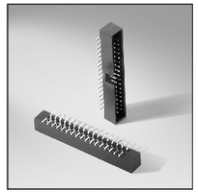
232 Series
Box Header
Page 40

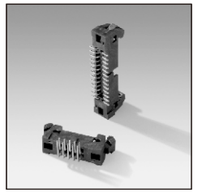
234 Series
Headers With Ejector
Latches 2.00"
Page 41/42

235 Series
Headers With Ejector
Latches 1.27"
Page 43/44

nextron®

P.C.B Monut (Page01-50 , 76-135)

Table of Contents

Cable Monut (Page51-75)

235 Series
Headers With Ejector
Latches 1.27"
Page 45

235 Series
Headers With Ejector
Latches 1.27"
Page 46

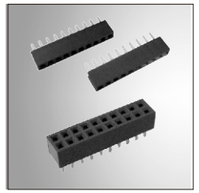
244/243 Series
Female Header,
Double Row,
Page 47

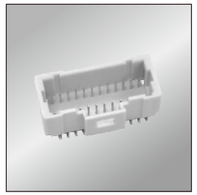
WF Series
Board to board connector
Page 48

470 Series
DC JACK
Page 49

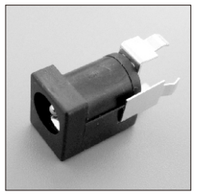
470 Series
DC JACK
Page 50

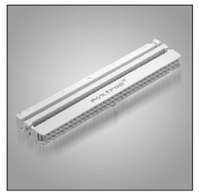
810 Series
IDC Socket Connectors
Page 51

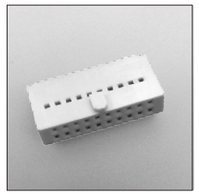
810 Series
IDC Housing And Contacts
Page 52

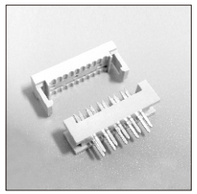
810 Series
IDC Socket Connectors
Page 53

812 Series
IDC Socket Connectors
Page 54

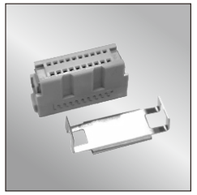
812 Series
IDC Socket Connectors
Page 55

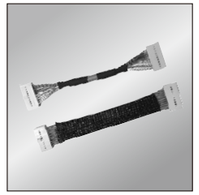
Cable Series
IDC CABLE ASSEMBLY
Page 56

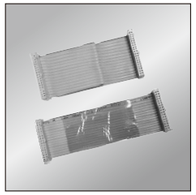
Cable Series
IDC CABLE ASSEMBLY
Page 57

SUB Series
D-Sub, DB
Page 58

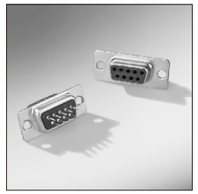
SUB Series
D-Sub, DP
Page 59

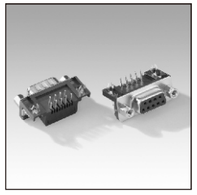
SUB Series
D-Sub, DR
Page 60

SUB Series
D-Sub, DIDC
Page 61

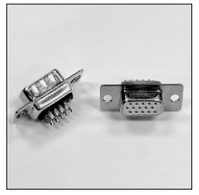
D-SUB Series
D-Sub, HB
Page 62

D-SUB Series
D-Sub, HP
Page 63

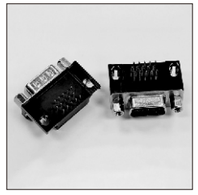
D-SUB Series
D-Sub, HR
Page 64

nextron®
Tel: +86-755-2605-2427 Fax: +86-755-2642-6035 Email:sales@jhjm.cc Internet: http://www.jhjm.cc

nextron®

P.C.B Monut (Page01-50 , 76-135)

Table of Contents

Cable Monut (Page51-75)

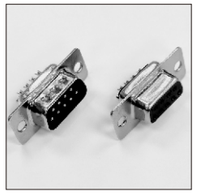

D-SUB Series
D-Sub, DB(MP)
Page 65

D-SUB Series
D-Sub, DP(MP)
Page 66

D-SUB Series
D-Sub, DR(MP)
Page 67

D-SUB Series
D-Sub, HDB(MP)
Page 68

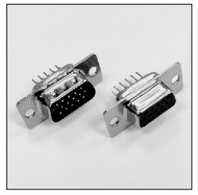

D-SUB Series
D-Sub, HDP(MP)
Page 69

D-SUB Series
D-Sub, Solder
Page 70

D-SUB Series
D-Sub, Standard Dip
Page 71

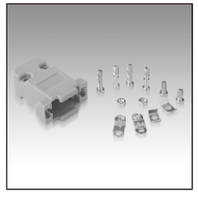

SUB Series
D-Sub, HOOD 9P
Page 72

SUB Series
D-Sub, HOOD 15P
Page 73

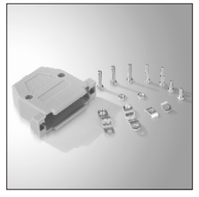

SUB Series
D-Sub, HOOD 25P
Page 74

SUB Series
D-Sub, HOOD 37P
Page 75

400 Series
Power Connector
For square post header
3.0mm/0.118"
Page 76

400 Series
Crimping Type Power Housing
And Contacts
For square post header 3.0mm/0.118
Page 77

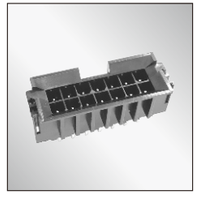

400 Series
4.20mm pitch 180
Double row policy with feet
Page 78

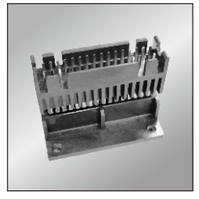

400 Series
Board to board
Custom connector
Page 79

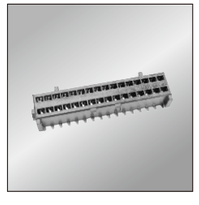

400 Series
Board to board
Custom connector
Page 80

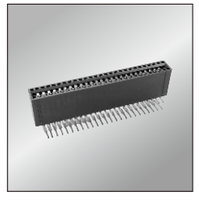

400 Series
2.54mm Female Socket
Dual Row/Right Angle
Page 81

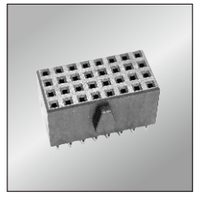

400 Series
2.54mm Female Header
Multi Row, Press Fit
Page 82

400 Series
2.54mm Pin Header
Straight , SMT /Press Fit
Page 83

400 Series
2.54mm Box Header
Double Row, Straight
Page 84

nextron®

P.C.B Monut (Page01-50 , 76-135)

Table of Contents

Cable Monut (Page51-75)

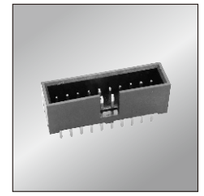

400 Series
2.54mm Box Header
Double Row, Straight
Page 85

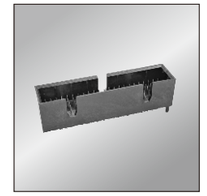

400 Series
2.54mm Box Header
Multi Row, Press Fit
Page 86

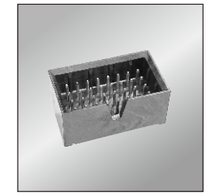

400 Series
2.54mm Box Header
Multi Row, Straight
Page 87

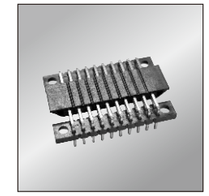

400 Series
2.54mm Pin Header
U type Double Row
Page 88

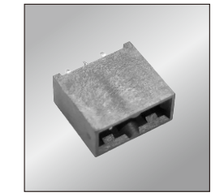

400 Series
5.08mm Custom connector
Single Row, Straight
Page 89

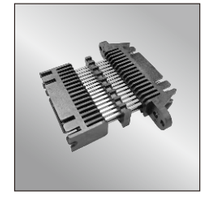

400 Series
Board to board Custom
connector
Page 90

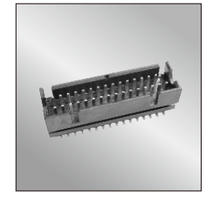

400 Series
Board to board Custom
connector / double row plugs
Page 91

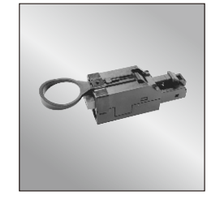

400 Series
Two core power plug (6A)
Page 92

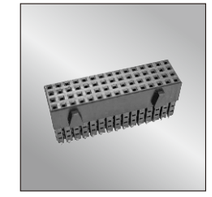

400 Series
2.54mm Female Header
Multi Row, Straight
Page 93

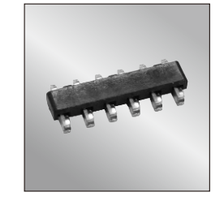

400 Series
2.54mm Pin Header
Straight , SMT /Press Fit
Page 94

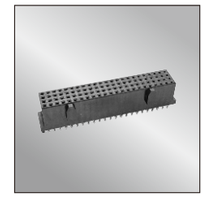

400 Series
2.54mm Female Header
Multi Row, Press Fit
Page 95

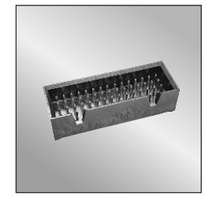

400 Series
2.54mm Box Header
Multi Row, Straight
Page 96

420 Series
Straight insert double row
male seat 4+20pin M
Page 97

420 Series
Double row seat Table stick
welding(SMT) 4+20pin F
Page 98

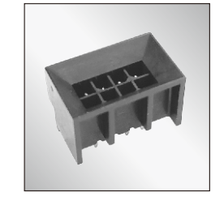

432 Series
Solder tail tin or gold plated
Page 99

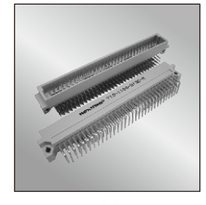

Din41612 Series
Din41612, "C" TYPE,MALE
RIGHT ANGLE
Page 100

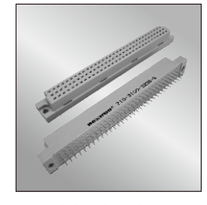

Din41612 Series
Din41612, "C" TYPE,FEMALE
STRAIGHT
Page 101

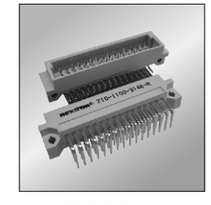

Din41612 Series
Din41612, "C" TYPE, MALE
RIGHT ANGLE
Page 102

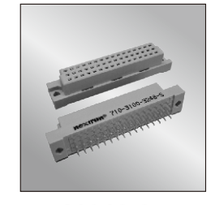

Din41612 Series
Din41612, "C" TYPE
FEMALE, STRAIGHT
Page 103

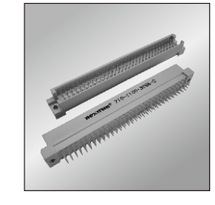

Din41612 Series
Din41612, "R" TYPE,
MALE, STRAIGHT
Page 104

Tel: +86-755-2605-2427 Fax: +86-755-2642-6035 Email:sales@jhjm.cc Internet: http://www.jhjm.cc

Din41612 Series
Din41612, "R" TYPE
FEMALE, Right Angle
Page 105

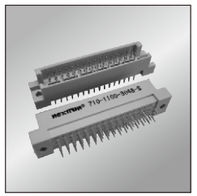

Din41612 Series
Din41612, "R" TYPE
MALE, STRAIGHT
Page 106

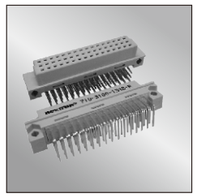

Din41612 Series
Din41612, "R" TYPE
FEMALE, Right Angle
Page 107

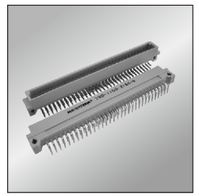

Din41612 Series
Din41612, "B" TYPE
MALE, RIGHT ANGLE
Page 108

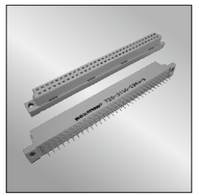

Din41612 Series
Din41612, "B" TYPE
FEMALE, STRAIGHT
Page 109

Din41612 Series
Din41612, "B" TYPE
MALE, RIGHT ANGLE
Page 110

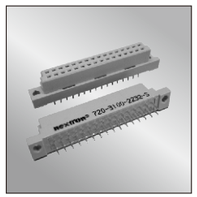

Din41612 Series
Din41612, "B" TYPE
FEMALE, STRAIGHT
Page 111

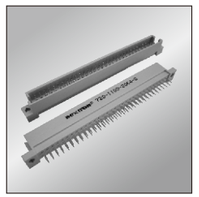

Din41612 Series
Din41612, "Q" TYPE
MALE, RIGHT ANGLE
Page 112

Din41612 Series
Din41612, "Q" TYPE
FEMALE, STRAIGHT
Page 113

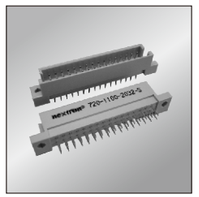

Din41612 Series
Din41612, "Q" TYPE
MALE, RIGHT ANGLE
Page 114

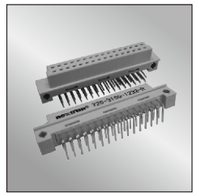

Din41612 Series
Din41612, "Q" TYPE
FEMALE, STRAIGHT
Page 115

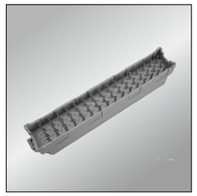

Din41612 Series
Din41612, "F" TYPE
MALE, RIGHT ANGLE
Page 116

Din41612 Series
Din41612, "F" TYPE
FEMALE, STRAIGHT
Page 117

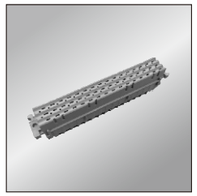

Din41612 Series
Din41612, "F" TYPE
FEMALE, STRAIGHT
Page 118

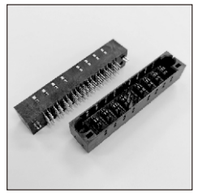

750 Series
Hybrid connector
Page 119

750 Series
Hybrid connector
Page 120

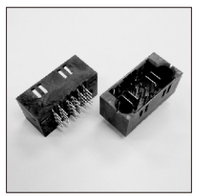

750 Series
Hybrid connector
Page 121

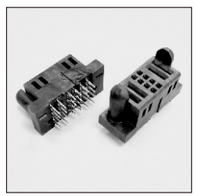

750 Series
Hybrid connector
Page 122

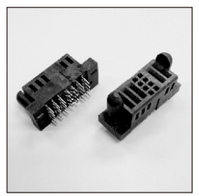

750 Series
Hybrid connector
Page 123

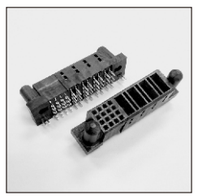

750 Series
Hybrid connector
Page 124

nextron®

P.C.B Monut (Page01-50 , 76-135)

Table of Contents

Cable Monut (Page51-75)

750 Series
Hybrid connector
Page 125

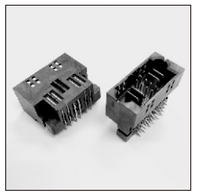

750 Series
Hybrid connector
Page 126

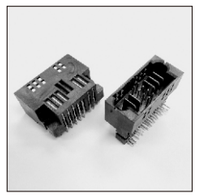

750 Series
Hybrid connector
Page 127

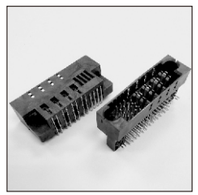

750 Series
Hybrid connector
Page 128

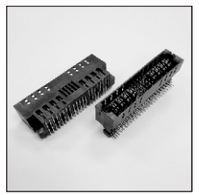

750 Series
Hybrid connector
Page 129

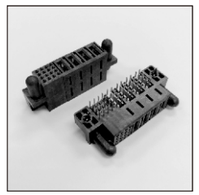

750 Series
Hybrid connector
Page 130

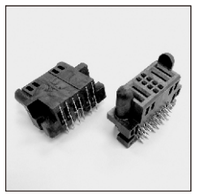

750 Series
Hybrid connector
Page 131

750 Series
Hybrid connector
Page 132

750 Series
Hybrid connector
Page 133

750 Series
Hybrid connector
Page 134

750 Series
Hybrid connector
Page 135

nextron®

Tel: +86-755-2605-2427 Fax: +86-755-2642-6035 Email:sales@jhjm.cc Internet: http://www.jhjm.cc

nextron®

100 Series

Dual-in-line IC Sockets - with screw machined pins
Open Frame - Standard
Solder tail tin/gold - standard 4 finger clip contacts
Pitch:2.54mm/0.1"

Technical Data

Material

- Pin: (outer sleeve) — Copper Alloy, Machined
- Clip: (4 finger Contact) — Copper Alloy, heat treated
- Plating: (outer sleeve) — Tin plated; 1.25 μm / 50 μ" nickel 2.54 μm / 100 μ" tin Gold plated; 1.25 μm /50 μ" nickel full gold flash
- Plating: (contact) — 1.25 μm / 50 μ" nickel gold and tin plating see table below
- Insulator body: (black) — Glass filled polyester UL 94 V-0

Electrical

- Current rating: 3.0 Amps / Contact max.
- Contact resistance: ≤20mΩ / contact
- Insulation resistance: ≥1000MΩ at V=100V
- Operating voltage: 60VAC / DC

Mechanical

- Average insertion force with steel pin of Ø 0.43mm / .017". ≤250g
- Average with-drawal force with steel pin of Ø 0.43mm / .017". ≥25g
- Mechanical life cycle: 200 Minimum
- Operating Temperature: (continuous) −25℃ to +105℃
- Soldering Temperature: +245℃, 10 s max.

Applications and Features

- The open frame version is the most common type.
- The open body design gives better access (for cleaning and inspections) to the PC-Board and better air cooling.
- High retention design prevents IC walkout during heavy vibrations.
- Pin design absolutely prevents 100% of the solder wicking and flux entrapment.
- Twist free construction.

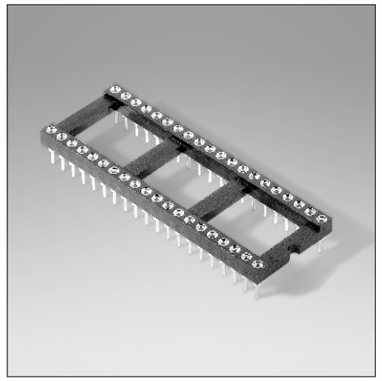

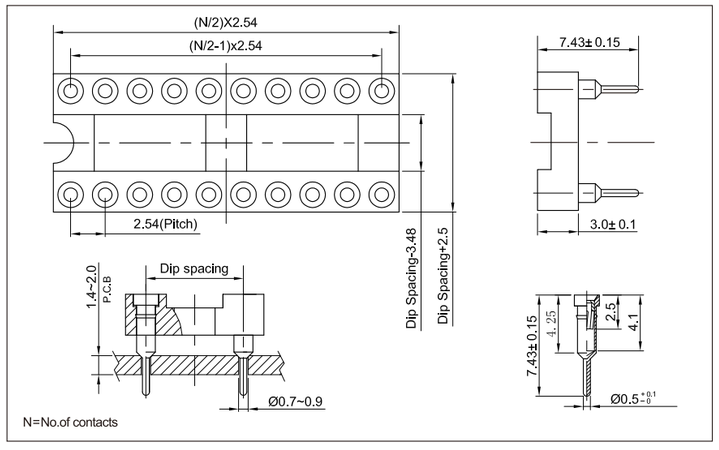

Notes: Please replace "X" with appropriate coding listed in the tables below

100 — XXX — XXX — XXXX — XX

No.of contacts

No.of contacts
06,08,10,14,16, 18,20,22,24,28,
20,22,24,28,32
24,28,32,36,40, 42,48,50,52
50,52,64

Dip Spacing

Code	Definition
3	7.62/.300"
4	10.16/.400"
6	15.24/.600"
7	19.05/.75"
9	22.86/.900"

Housing type

Code	Definition
1	With bar
2	Without bar
6-16Pins Without bar only	

Pitch

Code	Pitch
0	2.54/0.1"
7	1.778/.07"

Pin Length

Code	Definition
0	7.43x2.8mm
1	7.43x3.2mm
2	10.3mm
3	11.1mm
4	13.3mm
5	15.1mm
6	10.0mm

Pin and Clip plated

Code	Pin plated	Clip plated
1001	Tin 200 μ"	Gold flash
1003	Tin 200 μ"	Gold 10 μ"
1005	Tin 200 μ"	Gold 30 μ"
1007	Tin 200 μ"	Tin 200 μ"
1301	Gold flash	Gold flash
1303	Gold flash	Gold 10 μ"
1305	Gold flash	Gold 30 μ"
1307	Gold flash	Tin 200 μ"

Insulator material

Code	Definition
0	PBT
3	PA46
4	PA6T
6	PPS
7	LCP

Mark

Code	Definition
0	Nextron
1	No mark

Note: Dimensions are shown in Millimeters .Dimensions are for reference only.

nextron®
Tel: +86-755-2605-2427 Fax: +86-755-2642-6035 Email:sales@jhjm.cc Internet: http://www.jhjm.cc

nextron®

100 Series

Dual-in-line IC Sockets - with screw machined pins
Open Frame - High density
Solder tail tin/gold - standard 6 finger clip contacts
Pitch:1.778mm/0.07"

Technical Data

Material

- Pin: (outer sleeve) — Copper Alloy, Machined
- Clip: (4 finger Contact) — Copper Alloy, heat treated
- Plating: (outer sleeve) — Tin plated; 1.25 μ m / 50 μ" nickel 2.54 μ m / 100 μ" tin Gold plated; 1.25 μ m / 50 μ" nickel full gold flash
- Plating: (contact) — 1.25 μ m / 50 μ" nickel gold and tin plating see table below
- Insulator body: (black) — Glass filled polyester UL 94 V-0

Electrical

- Current rating: 3.0 Amps / Contact max.
- Contact resistance: ≤20mΩ / contact
- Insulation resistance: ≥1000MΩ at V=100V
- Operating voltage: 60VAC / DC

Mechanical

- Average insertion force with steel pin of Ø 0.43mm / .017". ≤250g
- Average with-drawal force with steel pin of Ø 0.43mm / .017". ≥25g
- Mechanical life cycle: 200 Minimum
- Operating Temperature: (continuous) -25℃ to +105℃
- Soldering Temperature: +245℃,10 s max.

Applications and Features

- The open frame version is the most common type.
- High retention design prevents IC walkout during heavy vibration.
- Pin design absolutely prevents 100% of the solder wicking and flux entrapment.
- Twist free construction.
- High density type.

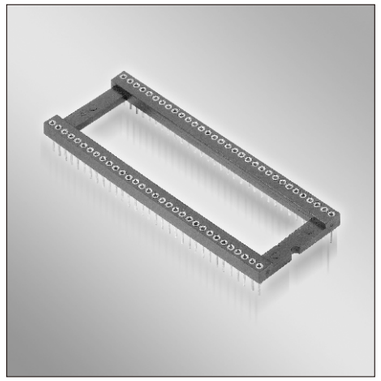

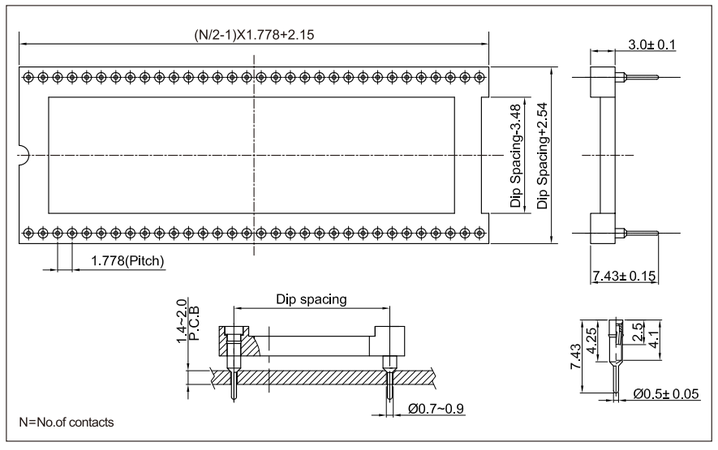

Notes: Please replace "X" with appropriate coding listed in the tables below

100 — XXX — XXX — XXXX — XX

No.of contacts

No.of contacts
06,08,10,14,16, 18,20,22,24,28,
20,22,24,28,32
24,28,32,36,40, 42,48,50,52
50,52,64

Dip Spacing

Code	Definition
3	7.62/.300"
4	10.16/.400"
6	15.24/.600"
7	19.05/.75"
9	22.86/.900"

Housing type

Code	Definition
1	With bar
2	Without bar
6-16Pins Without bar only	

Pitch

Code	Pitch
0	2.54/0.1"
7	1.778/.07"

Pin Length

Code	Definition
0	7.43x2.8mm
1	7.43x3.2mm
2	10.3mm
3	11.1mm
4	13.3mm
5	15.1mm
6	10.0mm

Pin and Clip plated

Code	Pin plated	Clip plated
1001	Tin 200 μ"	Gold flash
1003	Tin 200 μ"	Gold 10 μ"
1005	Tin 200 μ"	Gold 30 μ"
1007	Tin 200 μ"	Tin 200 μ"
1301	Gold flash	Gold flash
1303	Gold flash	Gold 10 μ"
1305	Gold flash	Gold 30 μ"
1307	Gold flash	Tin 200 μ"

Insulator material

Code	Definition
0	PBT
3	PA46
4	PA6T
6	PPS
7	LCP

Mark

Code	Definition
0	Nextron
1	No mark

Note: Dimensions are shown in Millimeters .Dimensions are for reference only.

nextron®
Tel: +86-755-2605-2427 Fax: +86-755-2642-6035 Email:sales@jhjm.cc Internet: http://www.jhjm.cc

nextron®

101 Series

Dual-in-line IC Sockets - With Screw machined pins
Wire Wrap Termination - Open Frame
Tin/gold - standard 4 finger clip contacts
Pitch:2.54mm/0.1"

Technical Data

Material

- Pin: (outer sleeve) — Copper Alloy, Machined
- Clip: (4 finger Contact) — Copper Alloy, heat treated
- Plating: (outer sleeve) — Tin plated; 1.25 μm / 50 μ" nickel 2.54 μm / 100 μ" tin Gold plated; 1.25 μm / 50 μ" nickel full gold flash
- Plating: (contact) — 1.25 μm / 50 μ" nickel gold and tin plating see table below
- Insulator body: (black) — Glass filled polyester UL 94 V-0

Applications and Features

- Common version for Wire Wrap IC-Sockets.
- Open frame version gives easier access to the PC Board and better air cooling.
- High retention design prevents IC walkout during heavy vibration.
- Pin design absolutely prevents 100% of the solder wicking and flux entrapment.
- Twist free construction.

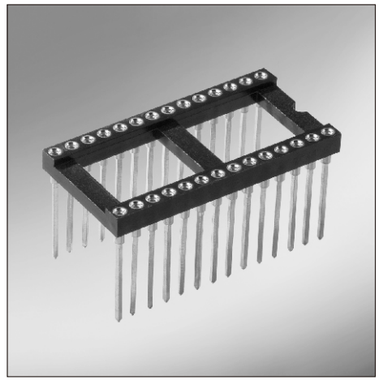

Electrical

- Current rating: 3.0 Amps / Contact max.
- Contact resistance: ≤20mΩ / contact
- Insulation resistance: ≥1000MΩ at V=100V
- Operating voltage: 60V

Mechanical

- Average insertion force with steel pin of Ø0.43mm / .017". ≤250g
- Average with-drawal force with steel pin of Ø0.43mm / .017". ≥25g
- Mechanical life cycle: 200 Minimum
- Operating Temperature: (continuous) -25℃ to +105℃
- Soldering Temperature: +245℃, 10 seconds.

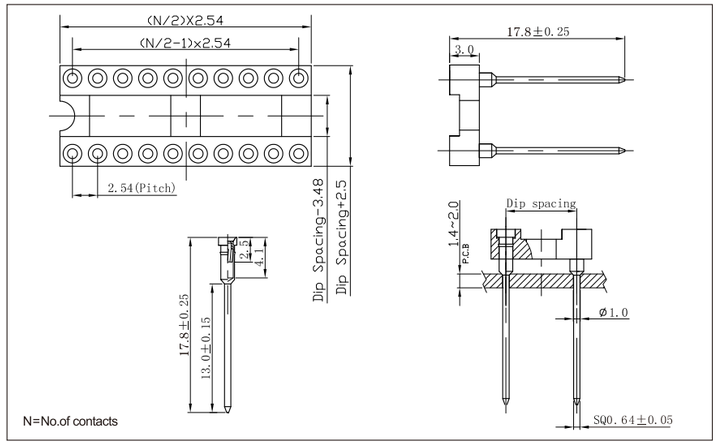

Notes: Please replace "X" with appropriate coding listed in the tables below

101 — XXX — XXX — XXXX — XX

No.of contacts

No.of contacts
06,08,10,14,16, 18,20,22,24,28, 32,40,48,64

Dip Spacing

Code	Definition
3	7.62/.300"
4	10.16/.400"
6	15.24/.600"
9	22.86/.900"

Housing type

Code	Definition
1	With bar
2	Without bar

Pitch

Code	Pitch
0	2.54/0.1"

Pin Length

Code	Definition
M	17.8mm
N	11.5mm
P	12.95mm
Q	14.4mm

Pin and Clip plated

Code	Pin plated	Clip plated
1001	Tin 200 μ"	Gold flash
1003	Tin 200 μ"	Gold 10 μ"
1005	Tin 200 μ"	Gold 30 μ"
1007	Tin 200 μ"	Tin 200 μ"
1301	Gold flash	Gold flash
1303	Gold flash	Gold 10 μ"
1305	Gold flash	Gold 30 μ"
1307	Gold flash	Tin 200 μ"

Insulator material

Code	Definition
0	PBT
3	PA46
6	PPS

Mark

Code	Definition
0	Nextron
1	No mark

Note: Dimensions are shown in Millimeters .Dimensions are for reference only.

nextron®

Tel: +86-755-2605-2427 Fax: +86-755-2642-6035 Email:sales@jhjm.cc Internet: http://www.jhjm.cc

nextron®

103 Series

IC Socket Strips - with screw machined pins
Ultra flat - Low Profile
Solder tail - tin/gold - 4 finger clip contacts
Pitch:2.54mm/0.1"

Technical Data

Material

- Pin: (outer sleeve) — Copper Alloy, Machined
- Clip: (4 finger Contact) — Copper Alloy, heat treated
- Plating: (outer sleeve) — Tin plated; 1.25 μm / 50 μ" nickel 2.54 μm / 100 μ" tin Gold plated; 1.25 μm / 50 μ" nickel full gold flash
- Plating: (contact) — 1.25 μm /50 μ" nickel gold and tin plating see table below
- Insulator body: (black) — Glass filled polyester UL 94 V-0

Applications and Features

- These Ultra Flat sockets present a total height over PC-Board of 2.25mm (0.088") instead of standard 4.5mm (0.177").
- They do exist in several standard configu-rations as per models indicated in the table"How to order".
- They accept all types of pins up to 0.56 mm (.022") diagonal/diameter.
- High retention design prevents IC walkout during heavy vibrations.
- Pin design absolutely prevents 100% of the solder wicking and flux entrapment..
- Low profile type.

Electrical

- Current rating: 3.0 Amps / Contact max.
- Contact resistance: ≤20mΩ / contact
- Insulation resistance: ≥1000MΩ at V=100V
- Operating voltage: 60V

Mechanical

- Average insertion force with steel pin of Ø 0.43mm / .017". ≤350g
- Average with-drawal force with steel pin of Ø 0.43mm / .017". ≥50g
- Mechanical life Cycle: 200 Minimum
- Operating Temperature: (continuous) -25℃ to +105℃
- Soldering Temperature: PPS: +260℃, 10 seconds. PBT: +245℃, 10 seconds.

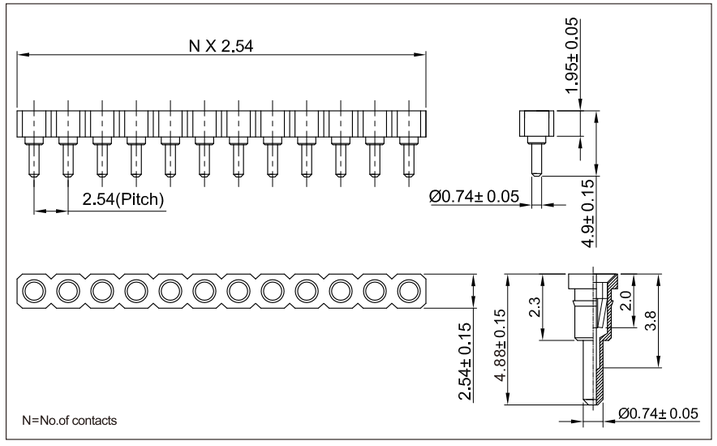

Notes: Please replace "X" with appropriate coding listed in the tables below

103 — X — XXXX — XXXX — XXX

No.of rows

Code	Definition
1	Single row
2	Double row

No.of contacts

Code	Definition
01 to 40	Single row
02 to 80	Double row

Pin Spacing(Pitch)

Code	Definition
1	2.54mm/.100"
2	5.08mm/.200"
3	7.62mm/.300"

Pin Length

Code	Definition
0	4.88mm
1	4.19mm
2	5.2mm
3	5.4mm
5	5.98mm

Pin and Clip plated

Code	PIN plated	Clip plated
1001	Tin 200 μ"	Gold flash
1003	Tin 200 μ"	Gold 10 μ"
1005	Tin 200 μ"	Gold 30 μ"
1007	Tin 200 μ"	Tin 200 μ"
1301	Gold flash	Gold flash
1303	Gold flash	Gold 10 μ"
1305	Gold flash	Gold 30 μ"
1307	Gold flash	Tin 200 μ"

Insulator height(H)

Code	Definition
3	3.0mm
5	1.95mm

Insulator material

Code	Definition
1	PPS
2	PBT

Mark

Code	Definition
0	Nextron
1	No mark

Note: Dimensions are shown in Millimeters .Dimensions are for reference only.

nextron®

Tel: +86-755-2605-2427 Fax: +86-755-2642-6035 Email:sales@jhjm.cc Internet: http://www.jhjm.cc

nextron®

104 Series

Dual-in-line IC Sockets-with screw machined pins press-fit application

High Density Strips open frame-standard

Solder tail tin/gold-standard 4 or 6 finger clip contacts

Pitch:2.54mm/0.1"

Technical Data

Material

- Pin: (outer sleeve) — Copper Alloy, Machined
- Clip: (Contact) — Copper Alloy, heat treated
- Plating: (outer sleeve) — Tin plated: 1.25um/ 50 u" nickel 2.54um/100 u" Tin; Gold plated: 1.25um/ 50 u" nickel Full gold flash
- Plating: (Contact) — 1.25um/ 50 u" nickel gold and tin plating see table below
- Insulator body: (Black) — Glass filled polyester UL 94V-0

Electrical

- Current rating: 3.0Amps/Contact MAX
- Contact resistance: ≤20mΩ /Contact
- Insulation resistance: ≥1000MΩ at V=100V
- Operating Voltage: 60VAC/DC

Mechanical

- Average insertion force with steel pin of Ø0.43mm/.017". ≤ 250g
- Average with-drawal force with steel pin of Ø0.43mm/.017". ≥ 25g
- Mechanical life cycle: 200 Minimum
- Operating Temperature: -25℃ to -105℃

Application and Features

- Common version for Wire Wrap IC-Socket.
- Open frame version gives easier access to the PC Board and better air cooling.
- High retention design prevents IC walkout during heavy vibration
- Pin design absolutely prevents 100% of pins press-fit
- Twist free construction

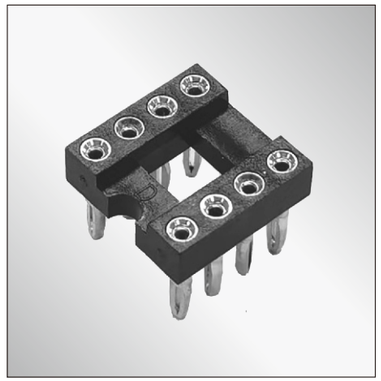

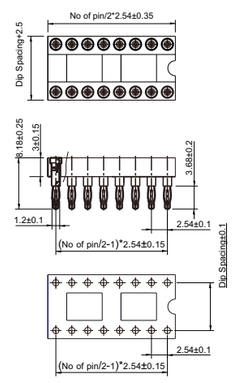

N=No.of conntacts

P.C.B LAYOUT

Notes: Please replace "X" with appropriate coding listed in the tables below

1 0 4 — X X X — X X X — X X X X — X X

No.of contacts

No.of contacts
06 08 10 14 16 18 20 22 28
24 28 32 36 40

Pin spacing (Pitch)

Code	Definition
3	7.62/.300"
6	15.24/.600"

Housing type

Code	Definition
1	With bar
2	Without bar
6-16Pins Without bar only	

Pitch

Code	Definition
0	2.54/0.1"

Pin Length

Code	Definition
8	8.2-3.8

Pin and Clip plated

Code	Pin plated	Pin plated
1001	Tin 100 u"	Gold flash
1003	Tin 100 u"	Gold 10u"
1005	Tin 100 u"	Gold 15u"
1007	Tin 100 u"	Tin 200 u"
1301	Gold flash	Gold flash
1303	Gold flash	Gold 10u"
1305	Gold flash	Gold 15u"

Insulator material

Code	Definition
1	PPS
2	PBT

Mark

Code	Definition
0	No mark
1	Nextron

Note: Dimensions are shown in Millimeters .Dimensions are for reference only.

nextron®
Tel: +86-755-2605-2427 Fax: +86-755-2642-6035 Email:sales@jhjm.cc Internet: http://www.jhjm.cc

nextron®

111 Series

Dual-in-line IC Sockets - with screw machined pins

Male Header - Interconnect

Open frame - solder tail - tin/gold

Pitch:2.54mm/0.1"

Technical Data

Material

- Pin: — Copper Alloy, Machined
- Plating:(Pin) — Tin plated; 1.25 μm / 50 μ" nickel 2.54 μm / 100 μ" tin Gold plated; 1.25 μm / 50 μ" nickel
- Insulator body: (black) — 0.025 μm / 1μ" full gold Glass filled polyester UL 94 V-0

Electrical

- Current rating: 3.0 Amps / Contact max.
- Insulation resistance: ⩾1000MΩ at V=100V
- Operating voltage: 60V

Mechanical

- Operating Temperature: (continuous) — -25℃ to -105℃
- Soldering Temperature: — PPS: +260℃, 10 seconds. PBT: +240℃, 10 seconds.

Applications and Features

- The Male Header contacts are dsigned for "Sandwich applications" because the pin Ø of 0.5mm / .020" can be plugged onto a standard IC-contact.
- 3 different heights are available.
- Twist free construction.

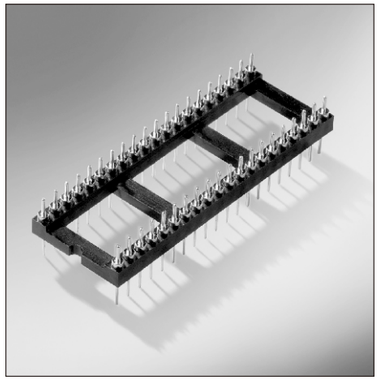

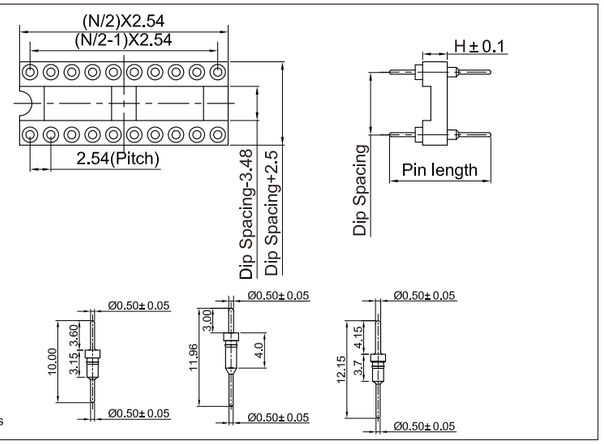

N=No.of contacts

Notes: Please replace "X" with appropriate coding listed in the tables below

1 1 1 — X X X — X X Z — X X X X — X X

No.of contacts

No.of contacts
06,08,10, 14,16,18, 20,22,24, 28,32,40, 48,64

Dip Spacing

Code	Definition
3	7.62/.300"
4	10.16/.400"
6	15.24/.600"
7	19.05/.750"
9	22.86/.900"

Housing type

Code	Definition
1	with bar
2	without bar

Pin Spacing(Pitch)

Code	Definition
0	2.54mm/.100"
7	1.778mm/.070"

PIN Code table

PIN Length	11.96mm	12.15mm	12.33mm	10.00mm
PIN Tin plated 5 μ m/200 μ"	8001	8011	8231	6001
PIN Gold flash plated	8002	8012	8232	6003
PIN Gold plated 0.25 μ m/10 μ"	8003	8013	8233	6002
PIN Gold plated 0.375 μ m/15 μ"	8004	8014	8234	6004
PIN Gold plated 0.5 μ m/20 μ"	8005	8015	8235	6005
PIN Gold plated 0.75 μ m/30 μ"	8006	8016	8236	6006
PIN Gold plated 0.075 μ m/3μ"	8007	8017	8237	6007

Insulator material

Code	Definition
0	PBT
3	PA46
6	PPS

Mark

Code	Definition
0	Nextron
1	No mark

Note: Dimensions are shown in Millimeters .Dimensions are for reference only.

nextron®
Tel: +86-755-2605-2427 Fax: +86-755-2642-6035 Email:sales@jhjm.cc Internet: http://www.jhjm.cc

nextron®

120 Series

IC Socket Strips - with screw machined pins

High Density Strips

Single row - solder tail - stand 6 finger clip contacts

Pitch=1.778mm/0.07"

Technical Data

Material

• Pin: (outer sleeve)	Copper Alloy, Machined
• Clip:(4 finger Contact)	Copper Alloy, heat treated
• Plating: (outer sleeve)	Tin plated; 1.25 μm / 50 μ" nickel 2.54 μm / 100 μ" tin Gold plated; 1.25 μm / 50 μ" nickel full gold flash
• Plating: (contact)	1.25 μm / 50 μ" nickel gold and tin plating see table below
• Insulator body: (black)	Glass filled polyester UL 94 V-0

Electrical

• Current rating:	3.0 Amps / Contact max.
• Contact resistance:	≤20mΩ / contact
• Insulation resistance:	≥1000MΩ at V=100V
• Operating voltage:	60VAC/DC

Mechanical

• Average insertion force with steel pin of Ø0.43mm / .017".	≤250g
• Average with-drawal force with steel pin of Ø0.43mm / .017".	≥25g
• Mechanical life Cycle:	200 Minimum
• Operating Temperature: (continuous)	-25℃ to +105℃
• Soldering Temperature:	PPS: +260℃, 10 seconds. PBT: +245℃, 10 seconds.

Applications and Features

- These IC-Socket Strips are the most common types.
- They come with 32 or 40 contacts as the standard for single row, and 64 or 80 contacts for double row.
- Any number of contacts can be ordered and cut to your requirements.
- High retention design prevents IC walkout during heavy vibration.
- Pin design absolutely prevents 100% of the solder wicking and flux entrapment.
- High density type.

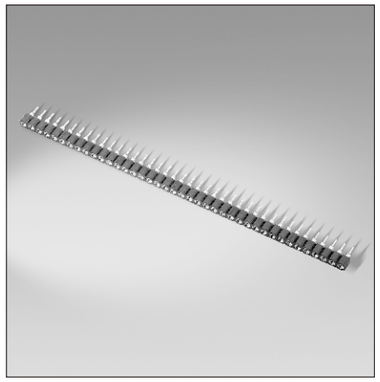

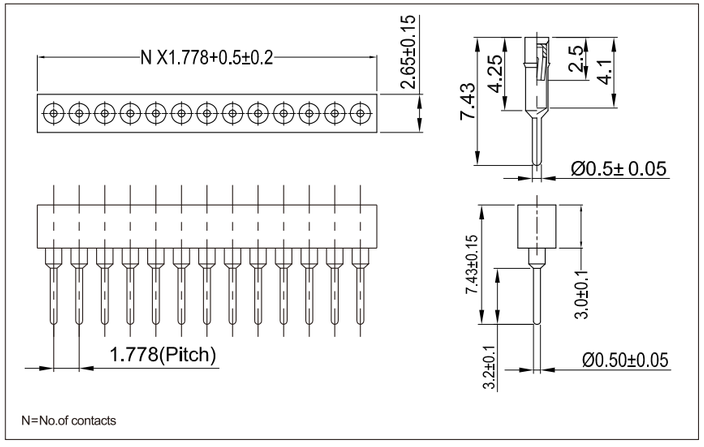

Notes: Please replace "X" with appropriate coding listed in the tables below

1 2 0 — 1 — X X X X — X X X X — X X X

No.of rows

Code	Definition
1	Single row
2	Double row

No.of contacts

Code	Definition
01 to 40	Single row

Pin Spacing(Pitch)

Code	Definition
1	2.54mm/.100"
2	5.08mm/.200"
3	7.62mm/.300"
7	1.778mm/.070"

Pin Length

Code	Definition
0	7.43x2.8mm
1	7.43x3.2mm
2	10.3x3.2mm
3	11.1mm
4	13.3x3.2mm

Pin and Clip plated

Code	PIN plated	Clip plated
1001	Tin 200 μ"	Gold flash
1003	Tin 200 μ"	Gold 10 μ"
1005	Tin 200 μ"	Gold 30 μ"
1007	Tin 200 μ"	Tin 200 μ"
1301	Gold flash	Gold flash
1303	Gold flash	Gold 10 μ"
1305	Gold flash	Gold 30 μ"
1307	Gold flash	Tin 200 μ"

Insulator height(H)

Code	Definition
2	2.7mm
3	3.0mm
4	4.2mm

Insulator material

Code	Definition
1	PPS
2	PBT
3	PA46
7	LCP

Mark

Code	Definition
0	Nextron
1	No mark

Note: Dimensions are shown in Millimeters .Dimensions are for reference only.

nextron®

Tel: +86-755-2605-2427 Fax: +86-755-2642-6035 Email:sales@jhjm.cc Internet: http://www.jhjm.cc

nextron®

120 Series

IC Socket Strips - with screw machined pins

Standard Strip

Single or double row - solder tail - standard 4 finger clip contacts

Pitch=2.54mm/0.1"

Technical Data

Material

• Pin: (outer sleeve)	Copper Alloy, Machined
• Clip:(4 finger Contact)	Copper Alloy, heat treated
• Plating: (outer sleeve)	Tin plated; 1.25 μ m / 50 μ" nickel 2.54 μm / 100 μ" tin Gold plated; 1.25 μ m / 50 μ" nickel full gold flash
• Plating: (contact)	1.25 μ m / 50 μ" nickel gold and tin plating see table below
• Insulator body: (black)	Glass filled polyester UL 94 V-0

Electrical

• Current rating:	3.0 Amps / Contact max.
• Contact resistance:	≤20mΩ / contact
• Insulation resistance:	≥1000MΩ at V=100V
• Operating voltage:	60VAC/DC

Mechanical

• Average insertion force with steel pin of Ø0.43mm / .017".	≤250g
• Average with-drawal force with steel pin of Ø0.43mm / .017".	≥25g
• Mechanical life Cycle:	200 Minimum
• Operating Temperature: (continuous)	-25℃ to +105℃
• Soldering Temperature:	PPS: +260℃, 10 seconds. PBT: +245℃, 10 seconds.

Applications and Features

- These IC-Socket Strips are the most common types.
- They come with 32 or 40 contacts as the standard for single row, and 64 or 80 contacts for double row.
- Any number of contacts can be ordered and cut to your requirements.
- High retention design prevents IC walkout during heavy vibration.
- Pin design absolutely prevents 100% of the solder wicking and flux entrapment.

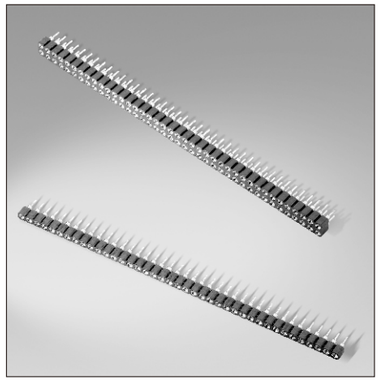

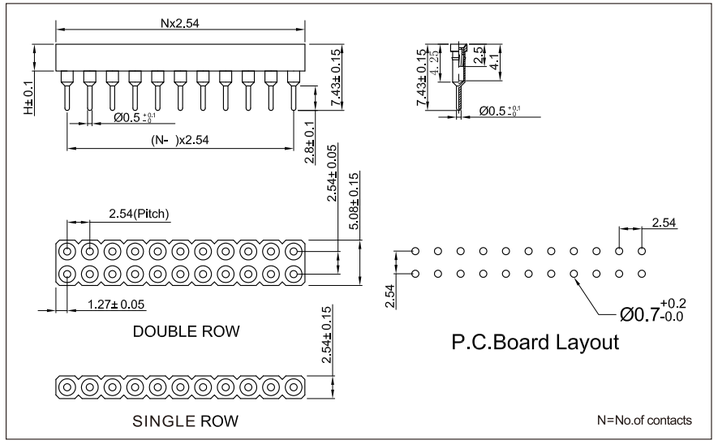

Notes: Please replace "X" with appropriate coding listed in the tables below

1 2 0 — X — X X X X — X X X X — X X X

No.of rows

Code	Definition
1	Single row
2	Double row

No.of contacts

Code	Definition
01 to 40	Single row
02 to 80	Double row

Pin Spacing(Pitch)

Code	Definition
1	2.54mm/.100"
2	5.08mm/.200"
3	7.62mm/.300"

Pin Length

Code	Definition
0	7.43x2.8mm
1	7.43x3.2mm
2	10.3x3.2mm
3	11.1mm
4	13.3x3.2mm

Pin and Clip plated

Code	PIN plated	Clip plated
1001	Tin 200 μ"	Gold flash
1003	Tin 200 μ"	Gold 10 μ"
1005	Tin 200 μ"	Gold 30 μ"
1007	Tin 200 μ"	Tin 200 μ"
1301	Gold flash	Gold flash
1303	Gold flash	Gold 10 μ"
1305	Gold flash	Gold 30 μ"
1307	Gold flash	Tin 200 μ"

Insulator height(H)

Code	Definition
2	2.7mm
3	3.0mm
4	4.2mm

Insulator material

Code	Definition
1	PPS
2	PBT
3	PA46
7	LCP

Mark

Code	Definition
0	Nextron
1	No mark

Note: Dimensions are shown in Millimeters .Dimensions are for reference only.

nextron®

Tel: +86-755-2605-2427 Fax: +86-755-2642-6035 Email:sales@jhjm.cc Internet: http://www.jhjm.cc

nextron®

121 Series

IC Socket Strips-with screw machined pins
High Density Strips
Single row-solder tail-standard 6 finger clip contacts
Pitch:1.27mm/0.05"

Technical Data

Material

- Pin: (outer sleeve) — Copper Alloy, Machined
- Clip: (Contact) — Copper Alloy, heat treated
- Plating: (outer sleeve) — Tin plated: 1.25um/ 50 u" nickel 2.54μm / 100 μ" tin
  2.54μm / 100 μ" tin Gold plated: 1.25um/ 50 u" nickel Full gold flash
- Plating: (Contact) — 1.25um/ 50 u" nickel gold and tin plating see table below
- Insulator body: (Black) — Glass filled polyester UL 94V-0

Electrical

- Current rating: 3.0Amps/Contact MAX
- Contact resistance: ≤20mΩ/ contact
- Insulation resistance: ≥1000MΩ at V=100V
- Operating Voltage: 60VAC/DC

Mechanical

- Average insertion force with steel pin of Ø0.381mm/.015". ≤60g
- Average with-drawal force with steel pin of Ø0.381mm/.015". ≥15g
- Mechanical life cycle: 200 Minimum
- Operating Temperature: -25℃ to -105℃
- Soldering Temperature: +245°C,10 Seconds

Applications and Features

- Common version for Wire Wrap IC-Socket.
- Open frame version gives easier access to the PC Board and better air cooling.
- High retention design prevents IC walkout during heavy vibration
- Pin design absolutely prevents 100% of the solder wicking and flux entrapment
- Twist free construction

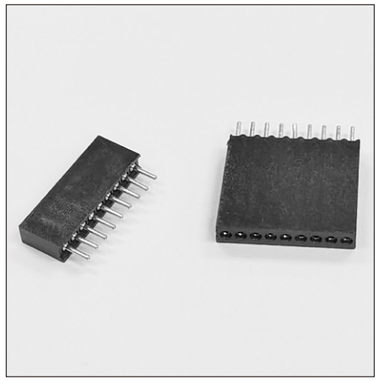

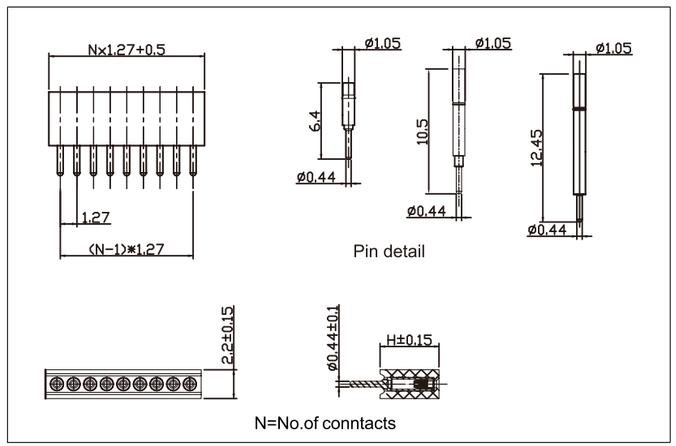

Notes: Please replace "X" with appropriate coding listed in the tables below

1 2 1 — X — X X X X — X X X X — X X X

Profile SPEC

Code	Definition
1	Single row Straight
2	Double row Straight
5	Single row Right angle
6	Double row Right angle
7	Single row SMT
8	Double row SMT

No.of contacts

Code	Definition
01-40	Single row
02-80	Double row

Pin spacing (Pitch)

Code	Definition
0	1.27mm /.050"

Pin Length x Depth

Code	Definition
0	6.0x2.9mm
1	6.4x3.2mm
9	10.5x7.3mm
B	12.45x7.3mm

Pin and Clip plated

Code	Pin plated	Pin plated
1001	Tin 200 u"	Gold flash
1003	Tin 200 u"	Gold 10u"
1005	Tin 200 u"	Gold 15u"
1007	Tin 200 u"	Tin 200 u"
1301	Gold flash	Gold flash
1303	Gold flash	Gold 10u"
1305	Gold flash	Gold 15u"

Insulator height(H)

Code	Definition
3	3.8mm
4	4.1mm
5	4.5mm
8	8.8mm
A	10.6mm

Insulator material

Code	Definition
1	PPS
2	PBT

Mark

Code	Definition
0	No mark
1	Nextron mark

Note: Dimensions are shown in Millimeters .Dimensions are for reference only.

nextron®
Tel: +86-755-2605-2427 Fax: +86-755-2642-6035 Email:sales@jhjm.cc Internet: http://www.jhjm.cc

nextron®

122 Series

IC Socket Strips - With Screw machined pins
Wire Wrap Termination - Strip type
Tin/gold - standard 4 finger clip contacts
Pitch:2.54mm/0.1"

Technical Data

Material

- Pin: (outer sleeve) — Copper Alloy, Machined
- Clip: (4 finger Contact) — Copper Alloy, heat treated
- Plating: (outer sleeve) — Tin plated; 1.25μm /50μ" nickel 2.54μm / 100μ" tin Gold plated; 1.25μm / 50μ" nickel full gold flash
- Plating: (contact) — 1.25μm / 50μ" nickel gold and tin plating see table below
- Insulator body: (black) — Glass filled polyester UL 94 V-0

Electrical

- Current rating: 3.0 Amps / Contact max.
- Contact resistance: ≤20mΩ / contact
- Insulation resistance: ≥1000MΩ at V=100V
- Operating voltage: 60VAC / DC

Mechanical

- Average insertion force with steel pin of Ø0.43mm / .017". ≤250g
- Average with-drawal force with steel pin of Ø0.43mm / .017". ≥25g
- Mechanical life cycle: 200 Minimum
- Operating Temperature: (continuous) -25℃ to -105℃
- Soldering Temperature: PPS: +260℃, 10 seconds. PBT: +245℃, 10 seconds.

Applications and Features

- The common vision for wire wrap IC-Socket.
- Side and end stackable.
- High retention design prevents IC walkout during heavy vibration.
- Pin design absolutely prevents 100% of the solder wicking and flux entrapment.
- Twist free construction.

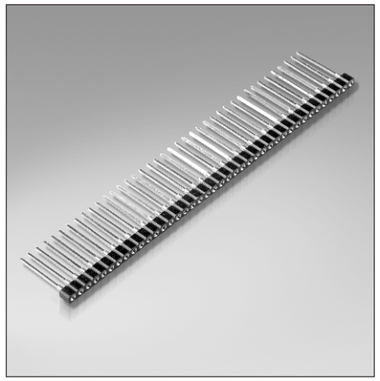

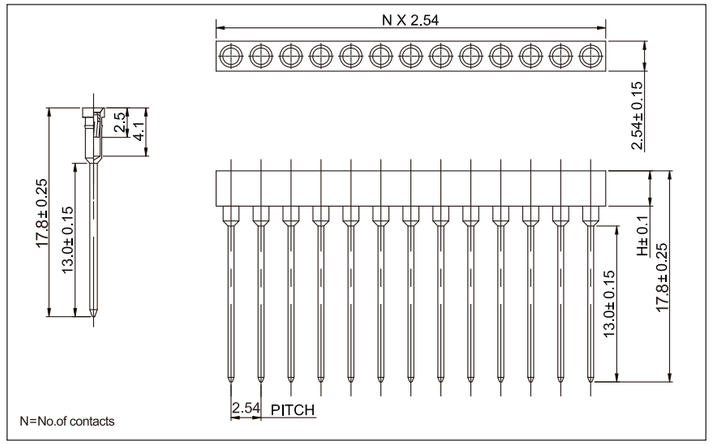

Notes: Please replace "X" with appropriate coding listed in the tables below

1 2 2 — X — X X X X — X X X X — X X X

No.of rows

Code	Definition
1	Single row
2	Double row

No.of contacts

Code	Definition
01 to 40	Single row
02 to 80	Double row

Pin Spacing(Pitch)

Code	Definition
1	2.54mm/.100"
2	5.08mm/.200"
3	7.62mm/.300"

Pin Length

Code	Definition
M	17.8mm
N	11.5mm
P	12.95mm
Q	14.4mm

Pin and Clip plated

Code	PIN plated	Clip plated
1001	Tin 200 μ "	Gold flash
1003	Tin 200 μ "	Gold 10 μ "
1005	Tin 200 μ "	Gold 30 μ "
1007	Tin 200 μ "	Tin 200 μ "
1301	Gold flash	Gold flash
1303	Gold flash	Gold 10 μ "
1305	Gold flash	Gold 30 μ "
1307	Gold flash	Tin 200 μ "

Insulator height(H)

Code	Definition
3	3.0mm
7	7.0mm

Insulator material

Code	Definition
1	PPS
2	PBT

Mark

Code	Definition
0	Nextron
1	No mark

Note: Dimensions are shown in Millimeters .Dimensions are for reference only.

nextron®
Tel: +86-755-2605-2427 Fax: +86-755-2642-6035 Email:sales@jhjm.cc Internet: http://www.jhjm.cc

nextron®

123 Series

IC Socket Strips - with screw machined pins
High Profile Strips
Single or double row - solder tail - standard 6 finger clip contacts
Pitch:2.54mm/0.1"

Technical Data

Material

- Pin: (outer sleeve) — Copper Alloy, Machined
- Clip:(4 finger Contact) — Copper Alloy, heat treated
- Plating: (outer sleeve) — Tin plated; 1.25μm / 50μ" nickel 2.54μm / 100μ" tin Gold plated; 1.25μm /50μ" nickel full gold flash
- Plating: (contact) — 1.25μm / 50μ" nickel gold and tin plating see table below
- Insulator body: (black) — Glass filled polyester UL 94 V-0

Electrical

- Current rating: 3.0 Amps / Contact max.
- Contact resistance: ≤20mΩ / contact
- Insulation resistance: ≥1000MΩ at V=100V
- Operating voltage: 60VAC/DC

Mechanical

- Average insertion force with steel pin of Ø0.66mm / .017". ≤150g
- Average with-drawal force with steel pin of Ø0.66mm / .017". ≥40g
- Mechanical life Cycle: 200 Minimum
- Temperature: (continuous) -25℃ to -105℃
- Soldering Temperature: PPS: +260℃, 10 seconds. PBT: +245℃, 10 seconds.

Applications and Features

- These IC-Socket Strips are the most common types.
- They come with 1 or 40 contacts as the standard for single row, and 2 or 80 contacts for double row.
- Any number of contacts can be ordered and cut to your requirements.
- High retention design prevents IC walkout during heavy vibration.
- Pin design absolutely prevents 100% of the solder wicking and flux entrapment.
- Side and end stackable.

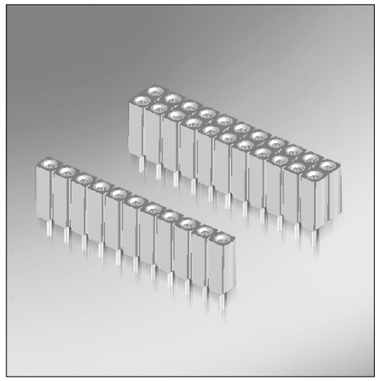

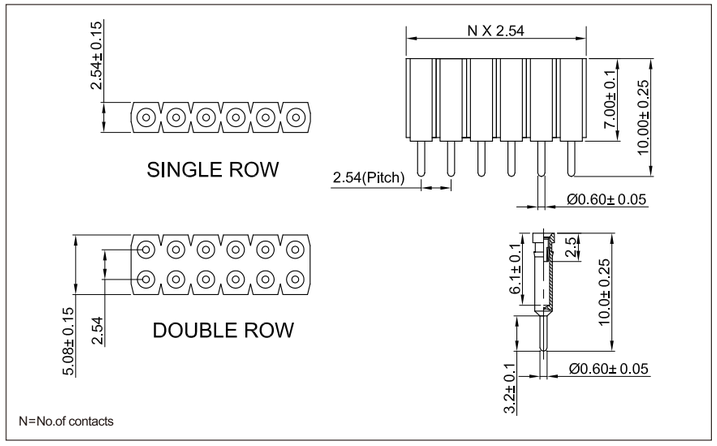

Notes: Please replace "X" with appropriate coding listed in the tables below

1 2 3 — X — X X X X — X X X X — X X X

No.of rows

Code	Definition
1	Single row Straight
2	Double row Straight
5	Single row Right angle
6	Double row Right angle
7	Single row SMT
8	Double row SMT

No.of contacts

Code	Definition
01 to 40	Single row
02 to 80	Double row

Pin Spacing(Pitch)

Code	Definition
1	2.54mm/.100"
2	5.08mm/.200"
3	7.62mm/.300"
7	1.778mm/.070"

Pin Length

Code	Definition
0	10.0mm
1	10.1mm
2	11.5mm
3	12.43mm

Pin and Clip plated

Code	PIN plated	Clip plated
1001	Tin 200 μ"	Gold flash
1003	Tin 200 μ"	Gold 10 μ"
1005	Tin 200 μ"	Gold 30 μ"
1007	Tin 200 μ"	Tin 200 μ"
1301	Gold flash	Gold flash
1303	Gold flash	Gold 10 μ"
1305	Gold flash	Gold 30 μ"
1307	Gold flash	Tin 200 μ"

Insulator height(H)

Code	Definition
4	4.2mm
5	5.2mm
7	7.0mm

Insulator material

Code	Definition
1	PPS
2	PBT

Mark

Code	Definition
0	Nextron
1	No mark

Note: Dimensions are shown in Millimeters .Dimensions are for reference only.

nextron®
Tel: +86-755-2605-2427 Fax: +86-755-2642-6035 Email:sales@jhjm.cc Internet: http://www.jhjm.cc

nextron®

124 Series

IC Socket Strips - with screw machined pins
Standard Strip
Single or double row - solder tail - standard 6 finger clip contacts
Pitch:2.0mm/0.07874"

Technical Data

Material

- Pin: (outer sleeve) — Copper Alloy, Machined
- Clip:(4 finger Contact) — Copper Alloy, heat treated
- Plating: (outer sleeve) — Tin plated; 1.25μm / 50μ" nickel 2.54μm / 200μ" tin Gold plated; 1.25μm / 50μ" nickel full gold flash
- Plating: (contact) — 1.25μm / 50μ" nickel gold and tin plating see table below
- Insulator body: (black) — Glass filled polyester UL 94 V-0

Electrical

- Current rating: 3.0 Amps / Contact max.
- Contact resistance: ≤20mΩ / contact
- Insulation resistance: ≥1000MΩ at V=100V
- Operating voltage: 60VAC/DC

Mechanical

- Average insertion force with steel pin of Ø0.43mm / .017". ≤250g
- Average with-drawal force with steel pin of Ø0.43mm / .017". ≥25g
- Mechanical life Cycle: 200 Minimum
- Operating Temperature: (continuous) -25℃ to -105℃
- Soldering Temperature: PPS: +260℃, 10 seconds. PBT: +245℃, 10 seconds.

Applications and Features

- These IC-Socket Strips are the most common types.
- They come with 32 or 50 contacts as the standard for single row, and 2X50 100 contacts for double row.
- Any number of contacts can be ordered and cut to your requirements.
- High retention design prevents IC walkout during heavy vibration.
- Pin design absolutely prevents 100% of the solder wicking and flux entrapment.

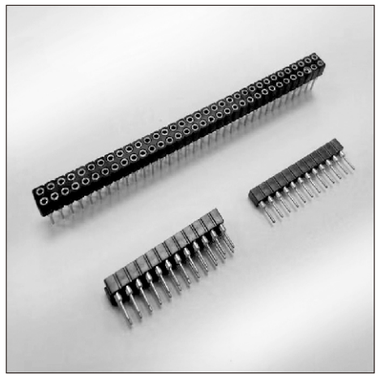

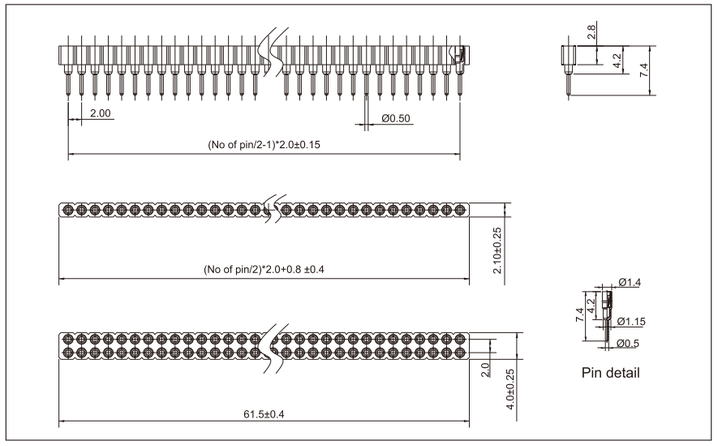

Notes: Please replace "X" with appropriate coding listed in the tables below

1 2 4 — X — X X 5 X — X X X X — X X X

No.of rows

Code	Definition
1	Single row Straight
2	Double row Straight
5	Single row Right angle
6	Double row Right angle
7	Single row SMT
8	Double row SMT

No.of contacts

Code	Definition
01 to 40	Single row
02 to 80	Double row

Pin Spacing(Pitch)

Code	Definition
5	2.00mm/.0.7874"

Pin Length

Code	Definition
3	5.18x1.75mm
7	7.4mm
9	13.55x3.2mm
A	5.6X3.2mm (Right Angle)

Pin and Clip plated

Code	PIN plated	Clip plated
1001	Tin 200 μ"	Gold flash
1003	Tin 200 μ"	Gold 10 μ"
1005	Tin 200 μ"	Gold 30 μ"
1007	Tin 200 μ"	Tin 200 μ"
1301	Gold flash	Gold flash
1303	Gold flash	Gold 10 μ"
1305	Gold flash	Gold 30 μ"
1307	Gold flash	Tin 200 μ"

Insulator height(H)

Code	Definition
2	2.8mm

Insulator material

Code	Definition
1	PPS
2	PBT

Mark

Code	Definition
0	Nextron
1	No mark

Note: Dimensions are shown in Millimeters .Dimensions are for reference only.

nextron®
Tel: +86-755-2605-2427 Fax: +86-755-2642-6035 Email:sales@jhjm.cc Internet: http://www.jhjm.cc

nextron®

126 Series

Adapter Strips - with screw machined pins
Straight Terminals
single or double row - solder or Wire Wrap tail tin/gold
Pitch:2.0mm/0.07874"

Technical Data

Material
- Pin: Copper Alloy, Machined
- Plating(Pin): Tin plated; 1.25 μm / 50 μ" nickel 2.54 μm / 100 μ" tin Gold plated; 1.25 μm / 50 μ" nickel 0.25mm / 1 μ" full gold
- Insulator body: (black) Glass filled polyester UL 94 V-0

Electrical
- Current rating: 3.0 Amps / Contact max.
- Insulation resistance: ⩾1000MΩ at V=100V
- Operating voltage: 60VAC/DC

Mechanical
- Operating Temperature: (continuous) -25℃ to -105℃
- Soldering Temperature: PPS: +260℃, 10 seconds. PBT: +245℃, 10 seconds.

Applications and Features
- The Straight Terminal Adapter Strips are designed for PC Board"Sandwich.
- Applications".
- They come with 50 contacts as the standard for single row, and 100 contacts for double row.
- Any number of contacts can be ordered and cut to your requirements.
- Side and end stackable.

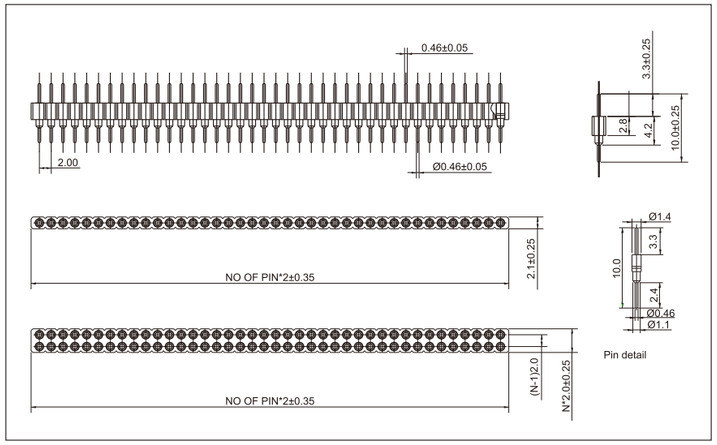

Notes: Please replace "X" with appropriate coding listed in the tables below

1 2 6 — X — X X X X — X X X X — X X X

No.of rows

Code	Definition
1	Single row
2	Double row

No.of contacts

Code	Definition
01 to 40	Single row
02 to 80	Double row

Pin Spacing(Pitch)

Code	Definition
5	2.00mm/.07874"
6	4.00mm/.1575"

Pin shape

Code	Definition
0	Straight
1	Right Angle
2	SMT

PIN Code table

PIN Length	12.1mm	12.33mm	10.00mm
PIN Tin plated 5 μ m/200 μ "	8211	8231	6201
PIN Gold flash plated	8212	8232	6202
PIN Gold plated 0.25 μ m/10 μ "	8213	8233	6203
PIN Gold plated 0.375 μ m/15 μ "	8214	8234	6204
PIN Gold plated 0.5 μ m/20 μ "	8215	8235	6205
PIN Gold plated 0.75 μ m/30 μ "	8216	8236	6206

Insulator height(H)

Code	Definition
2	2.8mm
3	3.3mm

Insulator material

Code	Definition
1	PPS
2	PBT

Mark

Code	Definition
0	Nextron
1	No mark

Note: Dimensions are shown in Millimeters .Dimensions are for reference only.

nextron®

Tel: +86-755-2605-2427 Fax: +86-755-2642-6035 Email:sales@jhjm.cc Internet: http://www.jhjm.cc

nextron®

127 Series

Adapter Strips - with screw machined pins
Straight Terminals
single or double row - solder or Wire Wrap tail tin/gold
Pitch:2.54mm/0.1"

Technical Data

Material
- Pin: Copper Alloy, Machined
- Plating(Pin): Tin plated; 1.25 μm / 50 μ" nickel 2.54 μm / 100 μ" tin Gold plated; 1.25 μm / 50 μ" nickel 0.25mm / 1 μ" full gold
- Insulator body: (black) Glass filled polyester UL 94 V-0

Electrical
- Current rating: 3.0 Amps / Contact max.
- Insulation resistance: ⩾1000MΩ at V=100V
- Operating voltage: 60VAC/DC

Mechanical
- Operating Temperature: (continuous) -25℃ to -105℃
- Soldering Temperature: PPS: +260℃, 10 seconds. PBT: +245℃, 10 seconds.

Applications and Features
- The Straight Terminal Adapter Strips are designed for PC Board"Sandwich.
- Applications".
- They come with 1-40 contacts as the standard for single row, and 2-80 contacts for double row.
- Any number of contacts can be ordered and cut to your requirements.
- Side and end stackable.

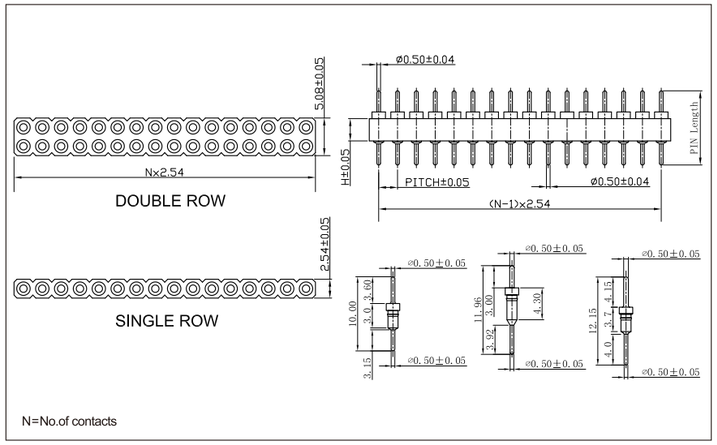

Notes: Please replace "X" with appropriate coding listed in the tables below

1 2 7 — X — X X X X — X X X X — X X X

No.of rows

Code	Definition
1	Single row Straight
2	Double row Straight
5	Single row Right angle
6	Double row Right angle
7	Single row SMT
8	Double row SMT

No.of contacts

Code	Definition
01 to 40	Single row
02 to 80	Double row

Pin Spacing(Pitch)

Code	Definition
1	2.54mm/.100"
2	5.08mm/.200"
3	7.62mm/.300"
7	1.778mm/.070"

Pin Shape

Code	Definition
0	Straight
1	Right Angle
A	SMT

PIN Code table

PIN Length	11.96mm	12.15mm	10.00mm	7.65mm
PIN Tin plated 5 μ m/200 μ "	8001	8011	6001	7001
PIN Gold flash plated	8002	8012	6003	7002
PIN Gold plated 0.25 μ m/10 μ "	8003	8013	6002	7003
PIN Gold plated 0.375 μ m/15 μ "	8004	8014	6004	7004
PIN Gold plated 0.5 μ m/20 μ "	8005	8015	6005	7005
PIN Gold plated 0.75 μ m/30 μ "	8006	8016	6006	7006

Insulator height(H)

Code	Definition
1	1.0mm
2	2.2mm
3	3.0mm
A	3.8mm

Insulator material

Code	Definition
1	PPS
2	PBT
3	PA46

Mark

Code	Definition
0	Nextron
1	No mark

Note: Dimensions are shown in Millimeters .Dimensions are for reference only.

nextron®

Tel: +86-755-2605-2427 Fax: +86-755-2642-6035 Email:sales@jhjm.cc Internet: http://www.jhjm.cc

nextron®

127 Series

Adapter Strips - with screw machined pins
High Density Strip
Single or double row - solder tail - standard 4 finger clip contacts
Pitch:1.778mm/0.07"

Technical Data

Material
- Pin: Copper Alloy, Machined
- Plating(Pin): Tin plated; 1.25μm / 50μ" nickel 2.54μm / 100μ" tin Gold plated; 1.25μm / 50μ" nickel 0.25mm / 1μ" full gold
- Insulator body: (black) Glass filled polyester UL 94 V-0

Electrical
- Current rating: 3.0 Amps / Contact max.
- Insulation resistance: ⩾1000MΩ at V=100V
- Operating voltage: 60VAC/DC

Mechanical
- Operating Temperatures: (continuous) -25℃ to +105℃
- Soldering Temperature: PPS: +260℃, 10 seconds. PBT: +245℃, 10 seconds.

Applications and Features
- The Straight Terminal Adapter Strips are designed for PC Board"Sandwich Applications".
- They come with 32 or 40 contacts as the standard for single row, and 80 contacts for double row.
- Any number of contacts can be ordered and cut to your requirements.
- Low profile type.
- Side and end stackable.
- High density type.

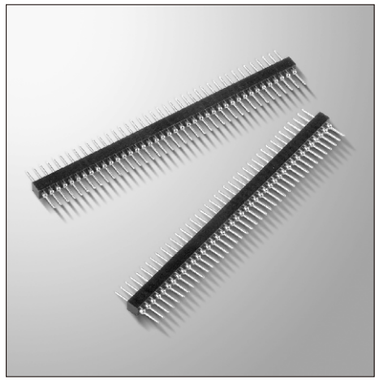

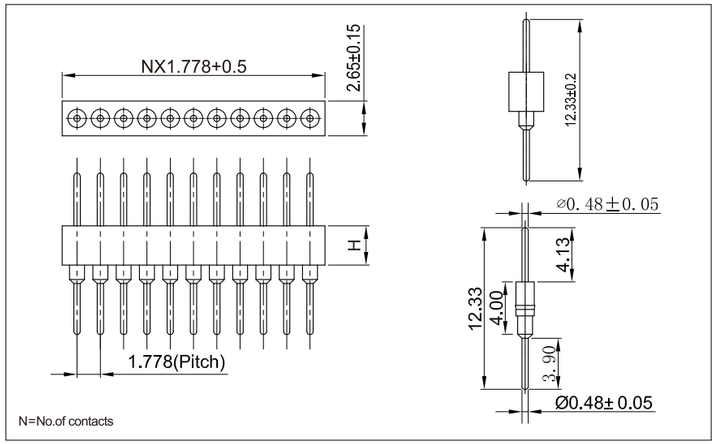

Notes: Please replace "X" with appropriate coding listed in the tables below

1 2 7 — X — X X X X — X X X X — X X X

No.of rows

Code	Definition
1	Single row Straight
2	Double row Straight
5	Single row Right angle
6	Double row Right angle
7	Single row SMT
8	Double row SMT

No.of contacts

Code	Definition
01 to 40	Single row
02 to 80	Double row

Pin Spacing(Pitch)

Code	Definition
1	2.54mm/.100"
2	5.08mm/.200"
3	7.62mm/.300"
7	1.778mm/.070"

Pin Shape

Code	Definition
0	Straight
1	Right Angle
A	SMT

PIN Code table

PIN Length	11.96mm	12.15mm	10.00mm	7.65mm
PIN Tin plated 5μm/200μ"	8001	8011	6001	7001
PIN Gold flash plated	8002	8012	6003	7002
PIN Gold plated 0.25μm/10μ"	8003	8013	6002	7003
PIN Gold plated 0.375μm/15μ"	8004	8014	6004	7004
PIN Gold plated 0.5μm/20μ"	8005	8015	6005	7005
PIN Gold plated 0.75μm/30μ"	8006	8016	6006	7006

Insulator height(H)

Code	Definition
1	1.0mm
2	2.2mm
3	3.0mm
A	3.8mm

Insulator material

Code	Definition
1	PPS
2	PBT
3	PA46

Mark

Code	Definition
0	Nextron
1	No mark

Note: Dimensions are shown in Millimeters .Dimensions are for reference only.

nextron®

Tel: +86-755-2605-2427 Fax: +86-755-2642-6035 Email:sales@jhjm.cc Internet: http://www.jhjm.cc

nextron®

128 Series

Adapter Strips - with screw machined pins
High Density Strip
Single or double row - solder tail - standard 4 finger clip contacts
Pitch:1.27mm/0.05"

Technical Data

Material
- Pin: Copper Alloy, Machined
- Plating(Pin): Tin plated; 1.25μm / 50μ" nickel 2.54μm / 100μ" tin Gold plated; 1.25μm / 50μ" nickel 0.25mm / 1μ" full gold
- Insulator body: (black) Glass filled polyester UL 94 V-0

Electrical
- Current rating: 3.0 Amps / Contact max.
- Insulation resistance: ⩾1000MΩ at V=100V
- Operating voltage: 60VAC/DC

Mechanical
- Operating Temperatures: (continuous) -25℃ to -105℃
- Soldering Temperature: PPS: +260℃, 10 seconds. PBT: +245℃, 10 seconds.

Applications and Features
- The Straight Terminal Adapter Strips are designed for PC Board"Sandwich Applications".
- They come with 50 contacts as the standard for single row, and 2X50 contacts for double row.
- Any number of contacts can be ordered and cut to your requirements.
- Low profile type.
- Side and end stackable.
- High density type.

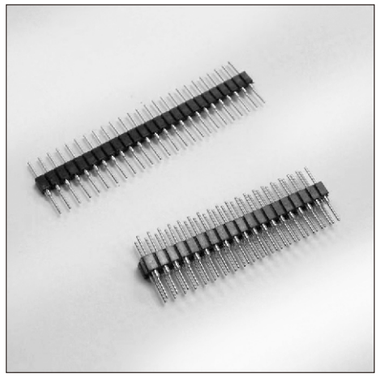

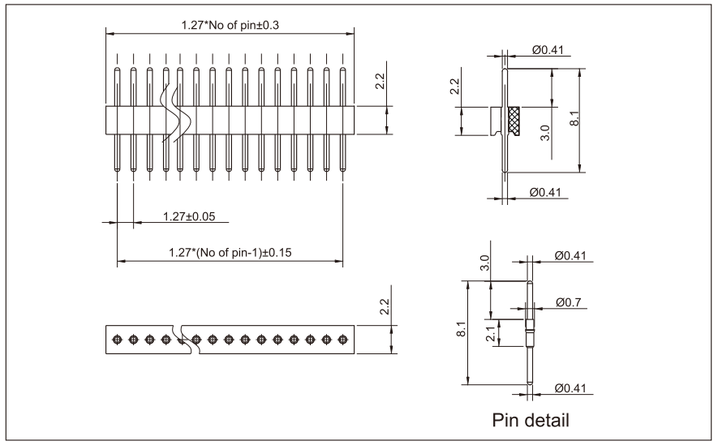

Notes: Please replace "X" with appropriate coding listed in the tables below

1 2 8 — X — X X X X — X X X X — X X X

No.of rows

Code	Definition
1	Single row
2	Double row

No.of contacts

Code	Definition
01 to 40	Single row
02 to 80	Double row

Pin Spacing(Pitch)

Code	Definition
0	1.27mm/.050"

Pin Shape

Code	Definition
0	Straight
1	Right Angle
A	SMT

PIN Code table

PIN Length	8.1mm
PIN Tin plated 5μm/200μ"	4101
PIN Gold flash plated	4102
PIN Gold plated 0.25μm/10μ"	4103
PIN Gold plated 0.375μm/15μ"	4104
PIN Gold plated 0.5μm/20μ"	4105
PIN Gold plated 0.75μm/30μ"	4106
PIN Gold plated 0.075μm/3μ"	4107

Insulator height(H)

Code	Definition
1	1.9mm
2	2.2mm

Insulator material

Code	Definition
1	PPS
2	PBT
3	PA46

Mark

Code	Definition
0	Nextron
1	No mark

Note: Dimensions are shown in Millimeters .Dimensions are for reference only.

nextron®

Tel: +86-755-2605-2427 Fax: +86-755-2642-6035 Email:sales@jhjm.cc Internet: http://www.jhjm.cc

150 Series

IC Socket - Stamped and formed contact version

Chip Carrier Socket - PLCC DIP

For square plastic chip carrier of 1.27 mm / 0.05" pitch

Technical Data

Material

- Contact: Copper Alloy
- Plating: (Contact) 2um/ 80 u" nickel 3.75um/ 150 u" tin gold plating upon request
- Insulator body: Glass filled polyester UL 94V-0

Electrical

- Current rating: 1.0 Amp continuous
- Contact resistance: ≤30mΩ
- Insulation resistance: ≥1000MΩ
- Dielection withstanding
- Voltage: 500V AC (1 minute)

Mechanical

- Operating Temperature: -55°C to 110°C -67°F to 257°F
- Mechanical life cycles: 25 cycles.
- Soldering Temperature: 240°C 10sec. max. 464°F, 10sec. max.

Applications and Features

- Accepts "JEDEC"type A, leaded chip carrier.
- Special contact design for high reliability and good withstanding to vibration and shock.
- Solder tails are positioned on 2.54 mm /.100"square grid.
- Low qrofile type.
- Stand-off's for cleaning and heat dissipation.
- Visual polarization for easy assembly.

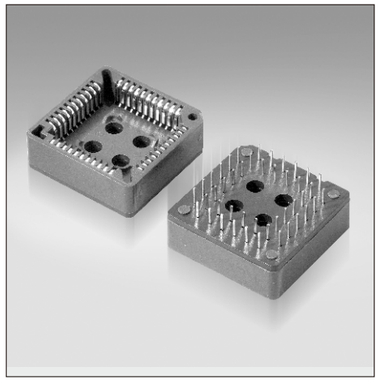

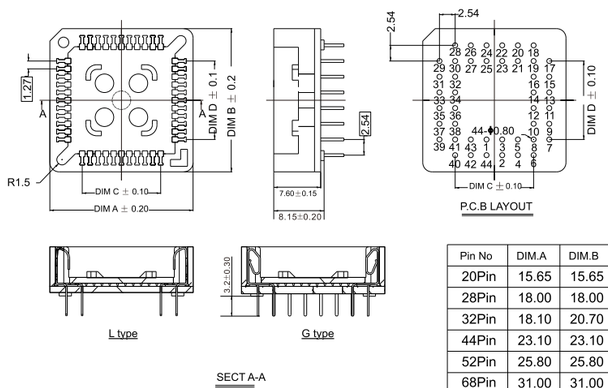

Pin No	DIM.A	DIM.B	DIM.C	DIM.D
20Pin	15.65	15.65	5.08	5.08
28Pin	18.00	18.00	7.62	7.62
32Pin	18.10	20.70	10.16	7.62
44Pin	23.10	23.10	12.70	12.70
52Pin	25.80	25.80	15.24	15.24
68Pin	31.00	31.00	20.32	20.32
84Pin	36.00	36.00	25.40	25.40

Notes: Please replace "X" with appropriate coding listed in the tables below

150 — 0XX — 11 — 0X — 0000

Contacts type

Code	Definition
0	"L"type
G	"G"type

Number of Pins

NO.of contacts
20,28,32,44, 52,68,84

Insulator Material

Code	Definition
1	PPS
2	PBT

Contacts Plating

Code	Definition
1	Tin plated 150u"
2	Gold flash

Mark

Code	Definition
0	Nextron
1	No mark

Note: Dimensions are shown in Millimeters .Dimensions are for reference only.

nextron®

Tel: +86-755-2605-2427 Fax: +86-755-2642-6035 Email:sales@jhjm.cc Internet: http://www.jhjm.cc

151 Series

IC Socket - Stamped and formed contact version

Chip Carrier Socket - PLCC SMT "S"

For square plastic chip carrier of 1.27 mm / 0.05" pitch

Technical Data

Material

- Contact: Copper Alloy
- Plating: (Contact) 2um/ 80 u" nickel 3.75um/ 150 u" tin gold plating upon request
- Insulator body: Glass filled polyester UL 94V-0

Electrical

- Current rating: 1.0 Amp continuous
- Contact resistance: ≤30mΩ
- Insulation resistance: ≥1000MΩ
- Dielection withstanding
- Voltage: 500V AC (1 minute)

Mechanical

- Operating Temperature: -55°C to 110°C
- Vibrations: 1 micro second without interruption
- Durability: 25 cycles

Applications and Features

- With 1.27mmpitch PCB layout
- SMT version.
- Accept"JEDEC"liadless chips (PLCC package)
- Available in 20,28,32,44,52,68 and 84 positions
- Available for IR-Reflow or vapor phase soldering.
- Visual window for solder-tails inspection

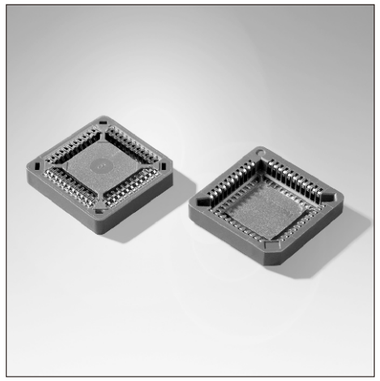

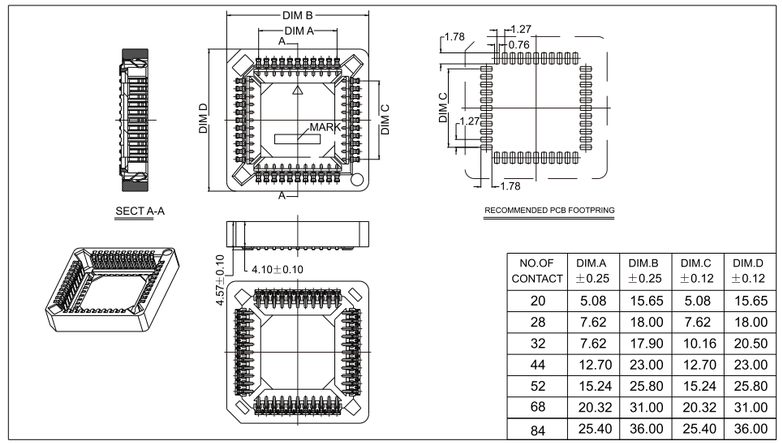

NO.OF CONTACT	DIM.A ±0.25	DIM.B ±0.25	DIM.C ±0.12	DIM.D ±0.12
20	5.08	15.65	5.08	15.65
28	7.62	18.00	7.62	18.00
32	7.62	17.90	10.16	20.50
44	12.70	23.00	12.70	23.00
52	15.24	25.80	15.24	25.80
68	20.32	31.00	20.32	31.00
84	25.40	36.00	25.40	36.00

Notes: Please replace "X" with appropriate coding listed in the tables below

151 — XXS0 — 118 — 0000

Number of contacts

NO.of contacts
20,28,32,44, 52,68,84

Contacts type

Code	Definition
S	"S"

Insulator material

Code	Definition
1	PPS

Contacts plating

Code	Definition
1	Tin plated 150u"
2	Gold flash
8	Matte Tin plated 150u"

Mark

Code	Definition
0	Nextron
1	No mark

Note: Dimensions are shown in Millimeters .Dimensions are for reference only.

nextron®

Tel: +86-755-2605-2427 Fax: +86-755-2642-6035 Email:sales@jhjm.cc Internet: http://www.jhjm.cc

151 Series

IC Socket - Stamped and formed contact version
Chip Carrier Socket - PLCC SMT
For square plastic chip carrier of 1.27 mm / 0.05" pitch

Technical Data

Material
- Contact: Copper Alloy
- Plating: (Contact) 2um/ 80 u" nickel 3.75um/ 150 u" tin gold plating upon request
- Insulator body: Glass filled polyester UL 94V-0

Electrical
- Current rating: 1.0Amp continuous
- Contact resistance: ⩽30mΩ
- Insulation resistance: ⩾1000MΩ
- Dielection withstanding
- Voltage: 500V AC (1 minute)

Mechanical
- Operating Temperature: -55°C to 110°C
- Vibrations: 1 micro second without interruption
- Durability: 25 cycles

Applications and Features
- With 1.27mmpitch PCB layout
- SMT version.
- Accept"JEDEC"liadless chips (PLCC package)
- Available in 20,28,32,44,52,68 and 84 positions
- Available for IR-Reflow or vapor phase soldering.
- Visual window for solder-tails inspection

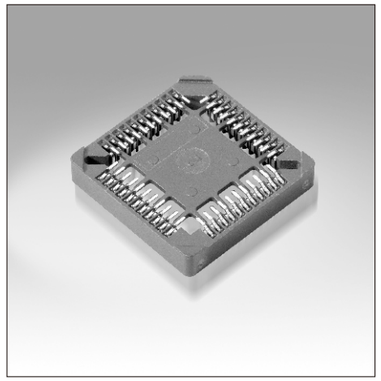

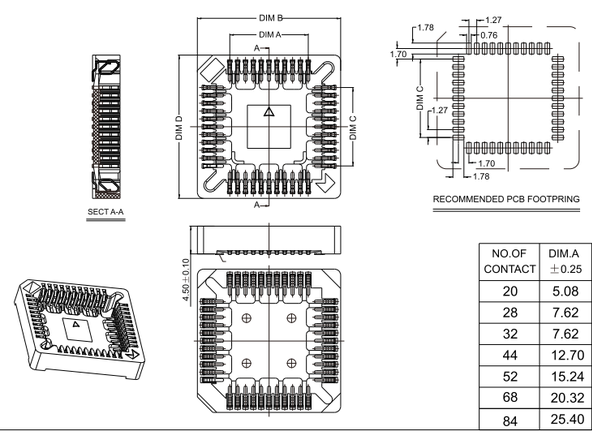

NO.OF CONTACT	DIM.A ±0.25	DIM.B ±0.25	DIM.C ±0.12	DIM.D ±0.12
20	5.08	15.65	5.08	15.65
28	7.62	18.20	7.62	18.20
32	7.62	18.10	10.16	20.70
44	12.70	23.20	12.70	23.20
52	15.24	25.82	15.24	25.82
68	20.32	30.90	20.32	30.90
84	25.40	35.98	25.40	35.98

Notes: Please replace "X" with appropriate coding listed in the tables below

151 — XX00 — 128 — 0000

Number of contacts

NO.of contacts
20,28,32,44, 52,68,84

Insulator material

Code	Definition
1	PPS

Contacts plating

Code	Definition
1	Tin plated 150u"
2	Gold flash
8	Matte Tin plated 150u"

Mark

Code	Definition
0	Nextron
1	No mark

Note: Dimensions are shown in Millimeters .Dimensions are for reference only.

Tel: +86-755-2605-2427 Fax: +86-755-2642-6035 Email:sales@jhjm.cc Internet: http://www.jhjm.cc

178 Series

Optical module board to board connector
High Density Strips
Single row-solder tail-standard 10 finger clip contacts
Pitch:1.778mm/0.07"

Technical Data

Material
- Contact Pin: Copper Alloy
- Plating: (Contact) 1.27um/ 50 u" nickel Gold or Tin plating See table below
- Insulator body: Glass filled polyester UL 94V-0 Standard-LCP

Electrical
- Current rating: 1.0Amps/Contact MAX
- Contact resistance: ≤10mΩ /Contact
- Insulation resistance: ≥1000MΩ at V=500V
- Operating Voltage: 150V

Mechanical
- Average insertion Terminal Retention Force 10N Min
- Mechanical life cycle: 500cycles
- Operating Temperature: -40°C to 125°C
- Soldering Temperature: +260°C,10 Seconds

Applications and Features
- The 10 position pin of the connector can isolate the number of skipped pins and selected pins

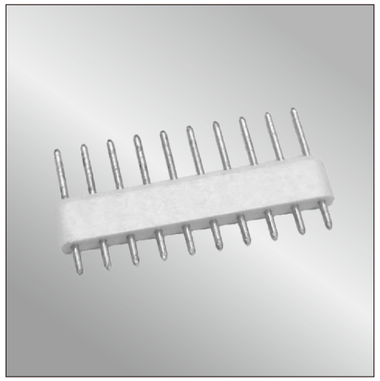

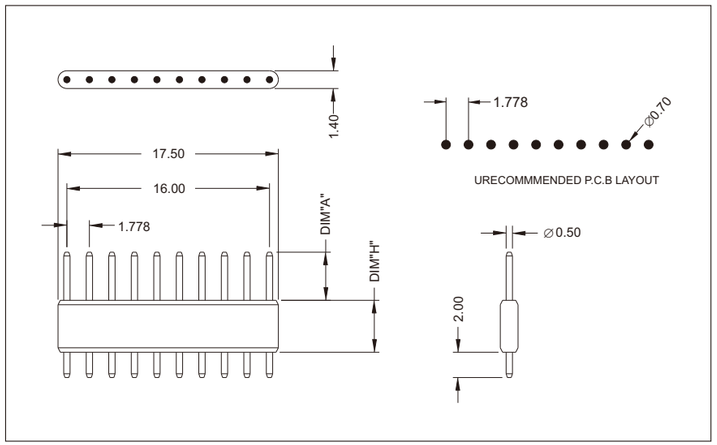

Notes: Please replace "X" with appropriate coding listed in the tables below

178 — 101X — 0X7X — 190

No.of contacts

Code	Definition
10	10pin
...	XXpin

Pin foot DIM"A"

Code	Definition
A	3.80mm
B	3.40mm
C	3.70mm
D	3.50mm

Insulator height(H)

Code	Definition
1	3.40mm
2	4.10mm
3	3.90mm
4	3.00mm

Pin and Clip plated

Code	Pin plated
1	Gold flash
2	Gold 3u"
7	Tin 100 u"

Insulator material

Code	Definition
1	LCP

Mark

Code	Definition
0	No mark
1	Nextron

Note: Dimensions are shown in Millimeters .Dimensions are for reference only.

Tel: +86-755-2605-2427 Fax: +86-755-2642-6035 Email:sales@jhjm.cc Internet: http://www.jhjm.cc

208 Series

Pin Headers Single Row Straight And Right Angle Type
Pitch:2.00mm/0.07874"

Technical Data

Material

- Contact: Copper Alloy
- Plating: (Contact) 1.25um/ 50 u" nickel gold and tin plating see table below
- Insulator body: Glass filled polyester UL 94V-0

Electrical

- Current rating: 1.0 Amp
- Contact resistance: 20mΩ max
- Insulation resistance: 1000MΩ min
- Dielection withstanding voltage: 500VAC RMS

Mechanical

- Operating Temperature: -25°C to 105°C
- Mating cycle: > 250 mating cycle

Applications and Features

- Contacts available in Phosphor bronze and Brass.
- Straight mount , right angle mount and SMT are available.
- Plug connector with and without eject latch.
- Center coding.
- The connector are available for press-fit, solder and THR process.

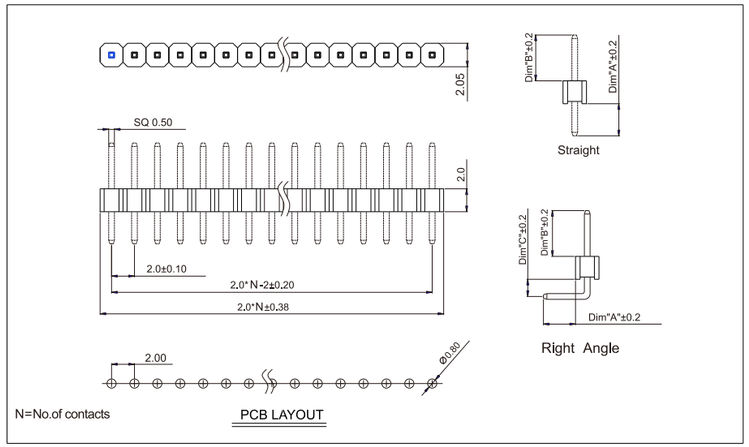

Notes: Please replace "X" with appropriate coding listed in the tables below

2 0 8 — X X X X — X 0 2 X — X X X

No. of contacts

02~40

Pin type

Code	Definition
1	Straight
2	Right Angle

Dim"A"x"B"

Code	Definition
1	2.8x4.0

Dim "C"

Code	Definition
0	NO(Straight)
1	0.25
2	1.0
3	1.5

Contact Plated

Code	Definition
1	Gold Flash
2	Gold 3u"
3	Gold 5u"
4	Gold 10u"
5	Gold 15u"

Insulator material

Code	Definition
1	LCP
4	PA 6T

Insulator Color

Code	Definition
0	Black

Mark

Code	Definition
0	No mark
1	Nextron

Note: Dimensions are shown in Millimeters .Dimensions are for reference only.

Tel: +86-755-2605-2427 Fax: +86-755-2642-6035 Email:sales@jhjm.cc Internet: http://www.jhjm.cc

210 Series

Pin Headers Dual Row Straight/Right Angle/SMT Type
Pitch:2.00mm/0.07874"

Technical Data

Material

- Contact: Copper Alloy
- Plating: (Contact) 1.25um/ 50 u" nickel gold and tin plating see table below
- Insulator body: Glass filled polyester UL 94V-0

Electrical

- Current rating: 1.0 Amp
- Contact resistance: 20mΩ max
- Insulation resistance: 1000MΩ min
- Dielection withstanding voltage: 500VAC RMS

Mechanical

- Operating Temperature: -25°C to 105°C
- Mating cycle: > 250 mating cycle

Applications and Features

- Contacts available in Phosphor bronze and Brass.
- Straight mount , right angle mount and SMT are available.
- Plug connector with and without eject latch.
- Center coding.
- The connector are available for press-fit, solder and THR process.

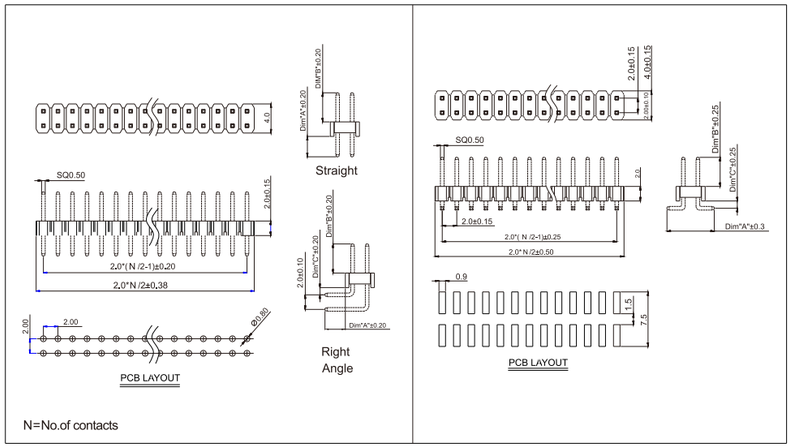

Notes: Please replace "X" with appropriate coding listed in the tables below

2 1 0 — X X X X — X 0 2 X — X X X

No. of contacts

02~40

Pin type

Code	Definition
1	Straight
2	Right Angle
4	SMT Type

Dim"A"x"B"

Code	Definition
1	2.8x4.0
5	6.5x4.0

Dim "C"

Code	Definition
0	NO(Straight)
1	0.25
2	1.0
3	1.5

Contact Plated

Code	Definition
1	Gold Flash
2	Gold 3u"
3	Gold 5u"
4	Gold 10u"
5	Gold 15u"

Insulator material

Code	Definition
1	LCP
4	PA 6T

Insulator Color

Code	Definition
0	Black

Mark

Code	Definition
0	No mark
1	Nextron

Note: Dimensions are shown in Millimeters .Dimensions are for reference only.

Tel: +86-755-2605-2427 Fax: +86-755-2642-6035 Email:sales@jhjm.cc Internet: http://www.jhjm.cc

211 Series

Pin Header Single Row Straight/Right Angle/SMT Type Pitch:2.54mm/0.1"

Technical Data

Material

- Contact: Copper Alloy
- Plating: (Contact) 1.25um/ 50 u" nickel gold and tin plating see table below
- Insulator body: Glass filled polyester UL 94V-0

Electrical

- Current rating: 3.0 Amp
- Contact resistance: 20mΩ max
- Insulation resistance: 1000MΩ min
- Dielection withstanding Voltage: 500 V AC RMS

Mechanical

- Operating Temperature: -25°C to 105°C
- Mating cycle: >500 mating cycle

Applications and Features

- Desktop/Deskside PCs
- Low end servers
- DASD (Direct Access Storage) systems/arrays
- Point-to-point link with hot-plugging capability
- High speeds

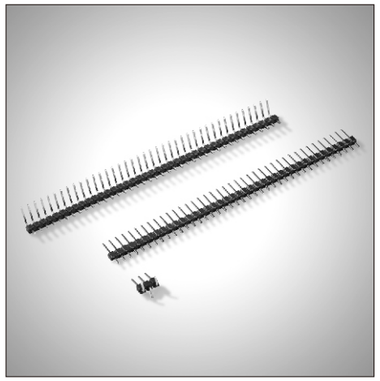

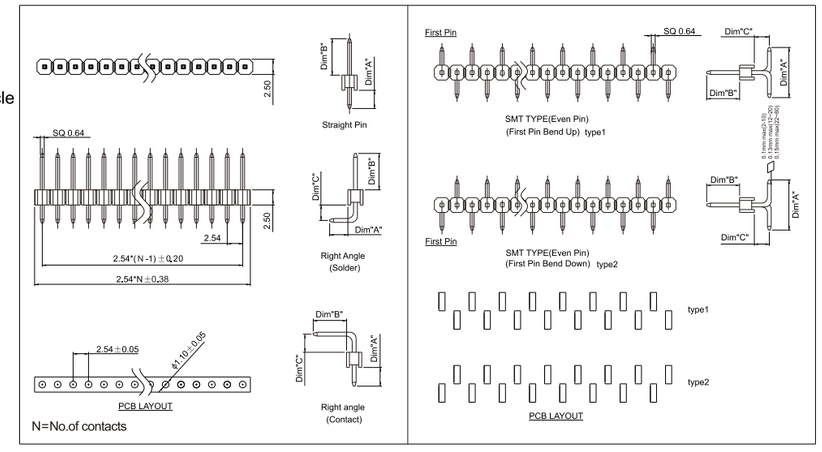

Notes: Please replace "X" with appropriate coding listed in the tables below

2 1 1 — X X X X — X 0 2 X — X X X

NO. of contacts	Pin type		Dim"A" X "B"		Dim"C"		Contact Plated		Insulator material		Insulator Color		Mark	
	Code	Definition	Code	Definition Dim AXB	Code	Definition	Code	Definition	Code	Definition	Code	Definition	Code	Definition
02~40	1	Straight	1	3.0x6.0	0	N0(Straight)	1	Gold/Flash	0	PBT	0	BLACK	0	No mark
	2	Right angle (Solder)	4	5.0x6.0	1	0.32 (Stick on Housing)	2	Gold 3u"	1	LCP	9	White	1	Nextron
	3	Right Angle (Contact)			8	1.5	5	Gold 15u"	4	PA 6T				
	4	SMT TYPE(Odd Pin) (First Pin Bend Up)(type1)					6	Gold 30u"						
	5	SMT TYPE(Odd Pin) (First Pin Bend Down)(type2)												
	6	SMT TYPE (Even Pin)												

Note: Dimensions are shown in Millimeters .Dimensions are for reference only.

nextron®

Tel: +86-755-2605-2427 Fax: +86-755-2642-6035 Email:sales@jhjm.cc Internet: http://www.jhjm.cc

212 Series

2.54mm Female Header ,Single Row, Straight/Right Angle

Technical Data

Material

- Contact: Copper Alloy
- Plating: (Contact) 1.25um/ 50 u" nickel gold and tin plating see table below
- Insulator body: Glass filled polyester UL 94V-0

Electrical

- Current rating: 3.0 Amp AC,DC
- Contact resistance: 20mΩ max
- Insulation resistance: 1000MΩ min
- Dielection withstanding voltage: 1000VAC RMS

Mechanical

- Operating Temperature: -40℃ to +105℃

Applications and Features

- Desktop/Deskside PCs
- Low end servers
- DASD (Direct Access Storage) systems/arrays
- Point-to-point link with hot-plugging capability
- Mates with 0.025(0.64)square

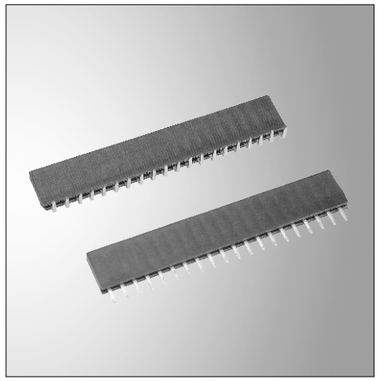

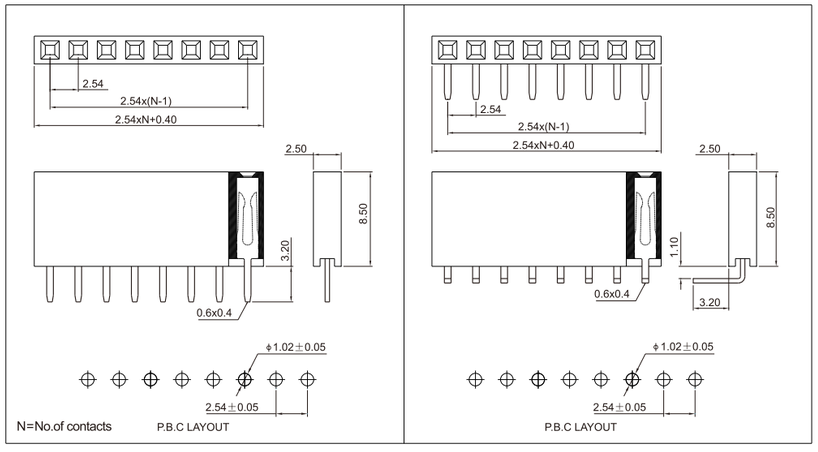

Notes: Please replace "X" with appropriate coding listed in the tables below

2 1 2 — X X X 0 — 0 0 X X — X X X

NO. of contacts	Pin type		Contact Material		Contact Plated				Insulator material		Insulator Color		Mark	
	Code	Definition	Code	Definition	Code	Definition	Code	Definition	Code	Definition	Code	Definition	Code	Definition
02~40	1	Straight	2	Brass	1	Gold/Flash	A	Gold 1u"/Light Tin	0	PBT	0	BLACK	0	No mark
	2	Right Angle	7	Phosphor Bronze	2	Gold 3u"	B	Gold 3u"/Light Tin	1	LCP			1	Nextron
					3	Gold 5u"	C	Gold 5u"/Light Tin	4	PA 6T				
					4	Gold 10u"	D	Gold 10u"/Light Tin	5	PA 9T				
					5	Gold 15u"	E	Gold 15u"/Light Tin						
					6	Gold 30u"	F	Gold 30u"/Light Tin						

Note: Dimensions are shown in Millimeters .Dimensions are for reference only.

nextron®

Tel: +86-755-2605-2427 Fax: +86-755-2642-6035 Email:sales@jhjm.cc Internet: http://www.jhjm.cc

212 Series

2.54mm Female Header , U Type Single Row, Straight/SMT

Technical Data

Material

- Contact: Copper Alloy
- Plating: (Contact) 1.25um/ 50 u" nickel gold and tin plating see table below
- Insulator body: Glass filled polyester UL 94V-0

Electrical

- Current rating: 3.0 Amp AC,DC
- Contact resistance: 20mΩ max
- Insulation resistance: 1000MΩ min
- Dielection withstanding voltage: 1000VAC RMS

Mechanical

- Operating Temperature: -40℃ to +105℃

Applications and Features

- Desktop/Deskside PCs
- Low end servers
- DASD (Direct Access Storage) systems/arrays
- Point-to-point link with hot-plugging capability
- Mates with 0.025(0.64)square

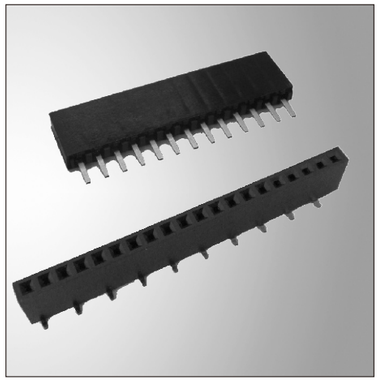

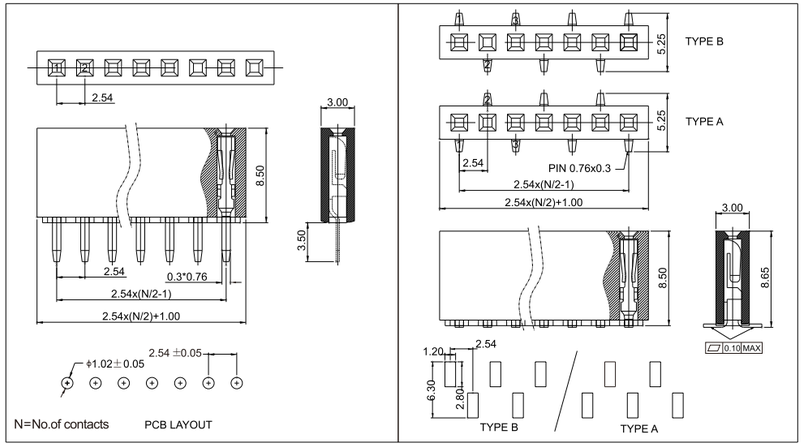

Notes: Please replace "X" with appropriate coding listed in the tables below

2 1 2 — X X X 0 — 1 A 7 X — X X X

NO. of contacts
02~40

Pin type

Code	Definition
1	Straight
2	Right Angle
5	SMT A type
6	SMT B type

Contact Material

Code	Definition
2	Brass
7	Phosphor Bronze

Contact Plated

Code	Definition	Code	Definition
1	Gold/Flash	A	Gold 1u"/Light Tin
2	Gold 3u"	B	Gold 3u"/Light Tin
3	Gold 5u"	C	Gold 5u"/Light Tin
4	Gold 10u"	D	Gold 10u"/Light Tin
5	Gold 15u"	E	Gold 15u"/Light Tin
6	Gold 30u"	F	Gold 30u"/Light Tin

Insulator material

Code	Definition
0	PBT
1	LCP
4	PA 6T
5	PA 9T

Insulator Color

Code	Definition
0	BLACK

Mark

Code	Definition
0	No mark
1	Nextron

Note: Dimensions are shown in Millimeters .Dimensions are for reference only.

nextron®

Tel: +86-755-2605-2427 Fax: +86-755-2642-6035 Email:sales@jhjm.cc Internet: http://www.jhjm.cc

213 Series

Pin Header Dual Row Straight/Right Angle/SMT Type Pitch:2.54mm/0.10"

Technical Data

Material

- Contact: Copper Alloy
- Plating: (Contact) 1.25um/ 50 u" nickel gold and tin plating see table below
- Insulator body: Glass filled polyester UL 94V-0

Electrical

- Current rating: 3.0 Amp
- Contact resistance: 20mΩ max
- Insulation resistance: 1000MΩ min
- Dielection withstanding
- Voltage: 500 V AC RMS

Mechanical

- Operating Temperature: -25•C to 105•C
- Mating cycle: ＞500 mating cycle

Applications and Features

- Desktop/Deskside PCs
- Low end servers
- DASD (Direct Access Storage) systems/arrays
- Point-to-point link with hot-plugging capability
- High speeds

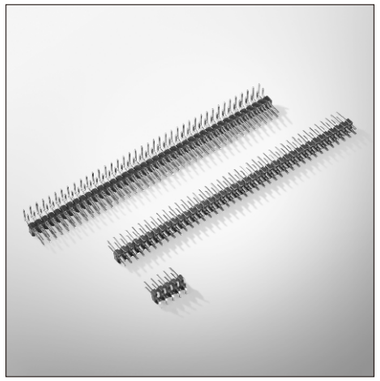

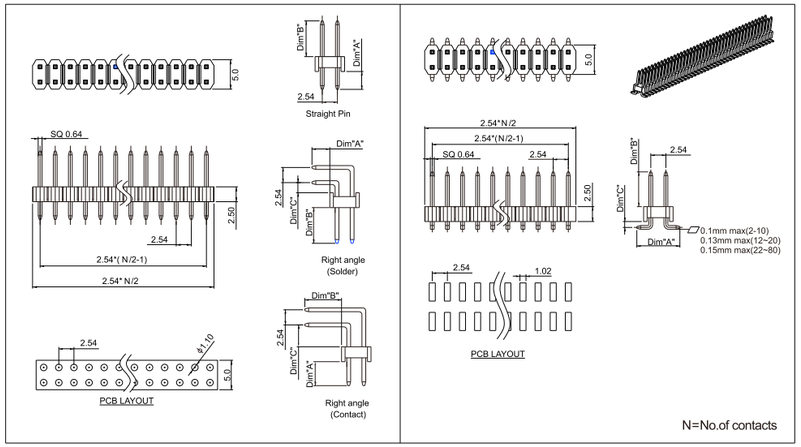

Notes: Please replace "X" with appropriate coding listed in the tables below

2 1 3 — X X X X — X 0 2 X — X X X

NO. of contacts
04~80

Pin type

Code	Definition
1	Straight
2	Right angle (Solder)
3	Right Angle (Contact)
4	SMT TYPE

Dim"A" X "B"

Code	Definition Dim AXB
1	3.0x6.0
9	7.5x6.0

Dim"C"

Code	Definition
0	N0(Straight)
1	0.32 (Stick on Housing)
8	1.5

Contact Plated

Code	Definition
1	Gold/Flash
2	Gold 3u"
5	Gold 15u"
6	Gold 30u"

Insulator material

Code	Definition
0	PBT
1	LCP
4	PA 6T

Insulator Color

Code	Definition
0	BLACK
9	White

Mark

Code	Definition
0	No mark
1	Nextron

Note: Dimensions are shown in Millimeters .Dimensions are for reference only.

nextron®

Tel: +86-755-2605-2427 Fax: +86-755-2642-6035 Email:sales@jhjm.cc Internet: http://www.jhjm.cc

nextron®

214 Series

2.54mm Female Header ,Double Row, Straight/Right Angle

Technical Data

Material

- Contact: Copper Alloy
- Plating: (Contact) 1.25um/ 50 u" nickel gold and tin plating see table below
- Insulator body: Glass filled polyester UL 94V-0

Electrical

- Current rating: 3.0 Amp AC,DC
- Contact resistance: 20mΩ max
- Insulation resistance: 1000MΩ min
- Dielection withstanding voltage: 1000VAC RMS

Mechanical

- Operating Temperature: -40℃ to +105℃

Applications and Features

- Desktop/Deskside PCs
- Low end servers
- DASD (Direct Access Storage) systems/arrays
- Point-to-point link with hot-plugging capability
- Mates with 0.025(0.64)square

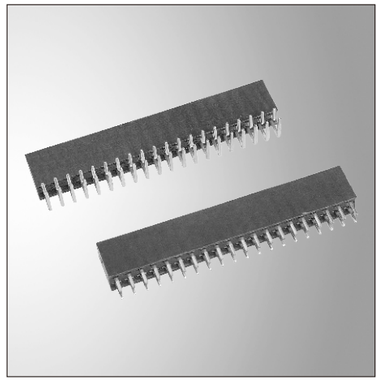

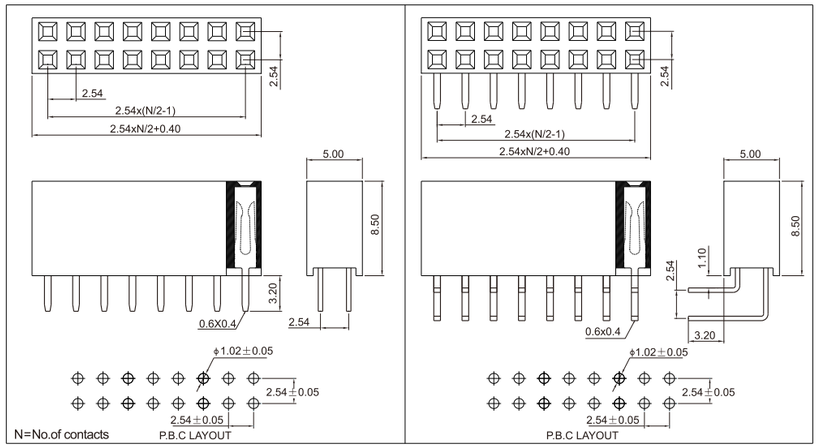

Notes: Please replace "X" with appropriate coding listed in the tables below

2 1 4 — X X X 0 — 0 0 X X — X X X

NO. of contacts: 04~80

Pin type Code	Definition
1	Straight
2	Right Angle

Contact Material Code	Definition
2	Brass
7	Phosphor Bronze

Contact Plated Code	Definition	Code	Definition
1	Gold/Flash	A	Gold 1u"/Light Tin
2	Gold 3u"	B	Gold 3u"/Light Tin
3	Gold 5u"	C	Gold 5u"/Light Tin
4	Gold 10u"	D	Gold 10u"/Light Tin
5	Gold 15u"	E	Gold 15u"/Light Tin
6	Gold 30u"	F	Gold 30u"/Light Tin

Insulator material Code	Definition
0	PBT
1	LCP
4	PA 6T
5	PA 9T

Insulator Color Code	Definition
0	BLACK

Mark Code	Definition
0	No mark
1	Nextron

Note: Dimensions are shown in Millimeters .Dimensions are for reference only.

nextron®
Tel: +86-755-2605-2427 Fax: +86-755-2642-6035 Email:sales@jhjm.cc Internet: http://www.jhjm.cc

nextron®

214 Series

2.54mm Female Header , U Type Double Row, Straight/SMT

Technical Data

Material

- Contact: Copper Alloy
- Plating: (Contact) 1.25um/ 50 u" nickel gold and tin plating see table below
- Insulator body: Glass filled polyester UL 94V-0

Electrical

- Current rating: 3.0 Amp AC,DC
- Contact resistance: 20mΩ max
- Insulation resistance: 1000MΩ min
- Dielection withstanding voltage: 1000VAC RMS

Mechanical

- Operating Temperature: -40℃ to +105℃

Applications and Features

- Desktop/Deskside PCs
- Low end servers
- DASD (Direct Access Storage) systems/arrays
- Point-to-point link with hot-plugging capability
- Mates with 0.025(0.64)square

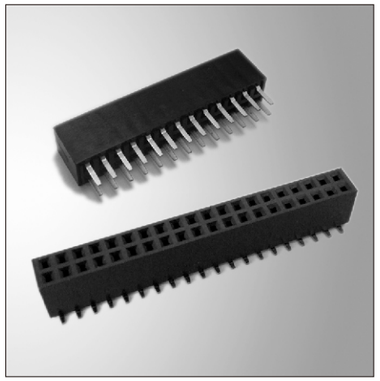

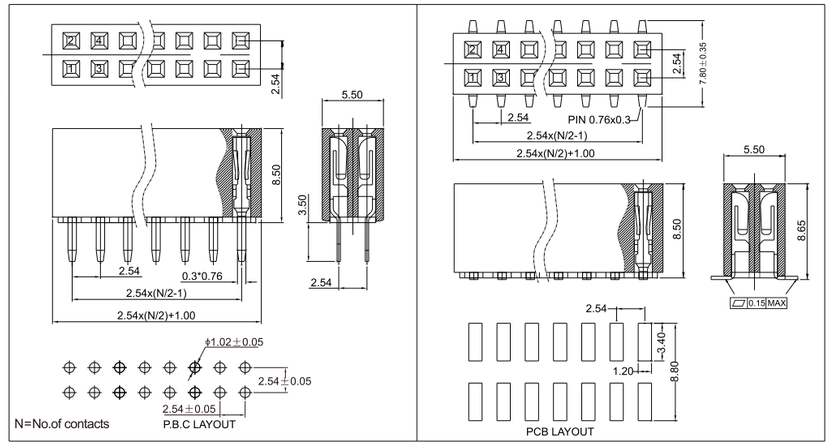

Notes: Please replace "X" with appropriate coding listed in the tables below

2 1 4 — X X X 0 — 1 A 7 X — X X X

NO. of contacts: 04~80

Pin type Code	Definition
1	Straight
5	S . M .T

Contact Material Code	Definition
2	Brass
7	Phosphor Bronze

Contact Plated Code	Definition	Code	Definition
1	Gold/Flash	A	Gold 1u"/Light Tin
2	Gold 3u"	B	Gold 3u"/Light Tin
3	Gold 5u"	C	Gold 5u"/Light Tin
4	Gold 10u"	D	Gold 10u"/Light Tin
5	Gold 15u"	E	Gold 15u"/Light Tin
6	Gold 30u"	F	Gold 30u"/Light Tin

Insulator material Code	Definition
0	PBT
1	LCP
4	PA 6T
5	PA 9T

Insulator Color Code	Definition
0	BLACK

Mark Code	Definition
0	No mark
1	Nextron

Note: Dimensions are shown in Millimeters .Dimensions are for reference only.

nextron®
Tel: +86-755-2605-2427 Fax: +86-755-2642-6035 Email:sales@jhjm.cc Internet: http://www.jhjm.cc

214 Series

2.54mm Female Header ,Double Row, Straight(PC104)

Technical Data

Material

- Contact: Copper Alloy
- Plating: (Contact) 1.25um/ 50 u" nickel gold and tin plating see table below
- Insulator body: Glass filled polyester UL 94V-0

Electrical

- Current rating: 3.0 Amp AC,DC
- Contact resistance: 20mΩ max
- Insulation resistance: 1000MΩ min
- Dielection withstanding voltage: 1000VAC RMS

Mechanical

- Operating Temperature: -40℃ to +105℃

Applications and Features

- Desktop/Deskside PCs
- Low end servers
- DASD (Direct Access Storage) systems/arrays
- Point-to-point link with hot-plugging capability
- Mates with 0.025(0.64)square

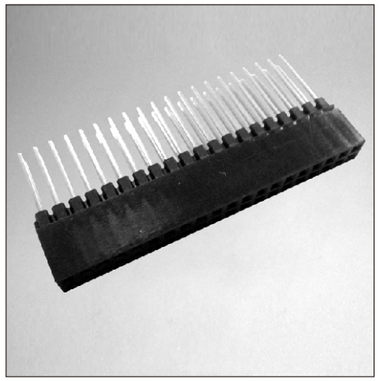

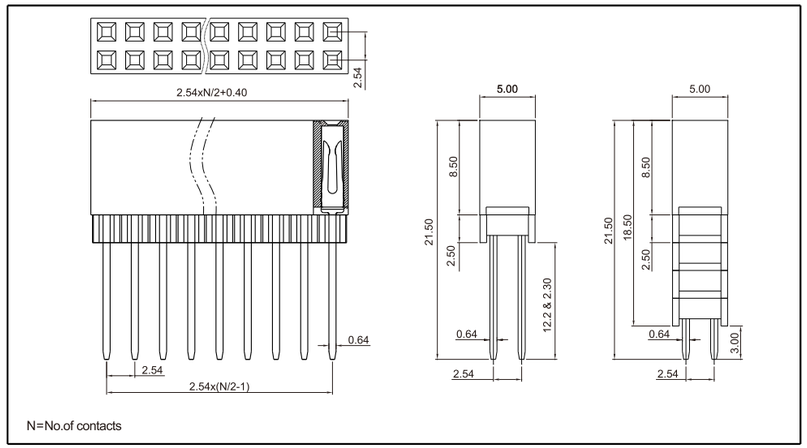

Notes: Please replace "X" with appropriate coding listed in the tables below

2 1 4 — X X A X — 0 X 7 X — X X X

NO. of contacts
04~80

Insulator Material"H"

Code	Definition
1	1Row=11.00
2	4Row=18.50
3	2Row=13.50
7	3Row=16.00

Contact Material

Code	Definition
3	1Row=12.2
4	1Row=2.30
5	4Row=3.00
7	2Row=8.00
9	3Row=5.50

Contact Plated

Code	Definition	Code	Definition
1	Gold/Flash	A	Gold 1u"/Light Tin
2	Gold 3u"	B	Gold 3u"/Light Tin
3	Gold 5u"	C	Gold 5u"/Light Tin
4	Gold 10u"	D	Gold 10u"/Light Tin
5	Gold 15u"	E	Gold 15u"/Light Tin
6	Gold 30u"	F	Gold 30u"/Light Tin

Insulator material

Code	Definition
0	PBT
1	LCP
4	PA 6T
5	PA 9T

Insulator Color

Code	Definition
0	BLACK

Mark

Code	Definition
0	No mark
1	Nextron

Note: Dimensions are shown in Millimeters .Dimensions are for reference only.

Tel: +86-755-2605-2427 Fax: +86-755-2642-6035 Email:sales@jhjm.cc Internet: http://www.jhjm.cc

214 Series

2.54mm Female Header ,Double Row, Straight

Technical Data

Material

- Contact: Copper Alloy
- Plating: (Contact) 1.25um/ 50 u" nickel gold and tin plating see table below
- Insulator body: Glass filled polyester UL 94V-0

Electrical

- Current rating: 3.0 Amp AC,DC
- Contact resistance: 20mΩ max
- Insulation resistance: 1000MΩ min
- Dielection withstanding voltage: 1000VAC RMS

Mechanical

- Operating Temperature: -40℃ to +105℃

Applications and Features

- Desktop/Deskside PCs
- Low end servers
- DASD (Direct Access Storage) systems/arrays
- Point-to-point link with hot-plugging capability
- Mates with 0.025(0.64)square

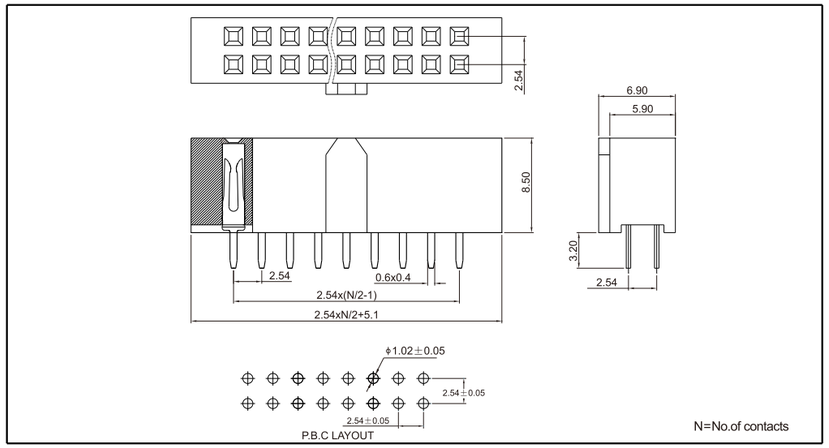

Notes: Please replace "X" with appropriate coding listed in the tables below

2 1 4 — X X 1 0 — N 0 X X — X X X

NO. of contacts
04~80

Pin type

Code	Definition
1	Straight
2	Right Angle

Contact Material

Code	Definition
2	Brass
7	Phosphor Bronze

Contact Plated

Code	Definition	Code	Definition
1	Gold/Flash	A	Gold 1u"/Light Tin
2	Gold 3u"	B	Gold 3u"/Light Tin
3	Gold 5u"	C	Gold 5u"/Light Tin
4	Gold 10u"	D	Gold 10u"/Light Tin
5	Gold 15u"	E	Gold 15u"/Light Tin
6	Gold 30u"	F	Gold 30u"/Light Tin

Insulator material

Code	Definition
0	PBT
1	LCP
4	PA 6T
5	PA 9T

Insulator Color

Code	Definition
0	BLACK
8	Grey
9	White

Mark

Code	Definition
0	No mark
1	Nextron

Note: Dimensions are shown in Millimeters .Dimensions are for reference only.

Tel: +86-755-2605-2427 Fax: +86-755-2642-6035 Email:sales@jhjm.cc Internet: http://www.jhjm.cc

214 Series

2.54mm Female Header , Double Row , Press Fit

Technical Data

Material

- Contact: Copper Alloy
- Plating: (Contact) 1.25um/ 50 u" nickel gold and tin plating see table below
- Insulator body: Glass filled polyester UL 94V-0

Applications and Features

- Power signal transmission
- Low end servers
- DASD (Direct Access Storage) systems/arrays
- Mates with 400-DH32-M02C-100

Electrical

- Current rating: 3.0 Amp AC,DC
- Contact resistance: 20mΩ max
- Insulation resistance: 1000MΩ min
- Dielection withstanding Voltage: 1000VAC RMS

Mechanical

- Operating Temperature: -55°C to 125°C

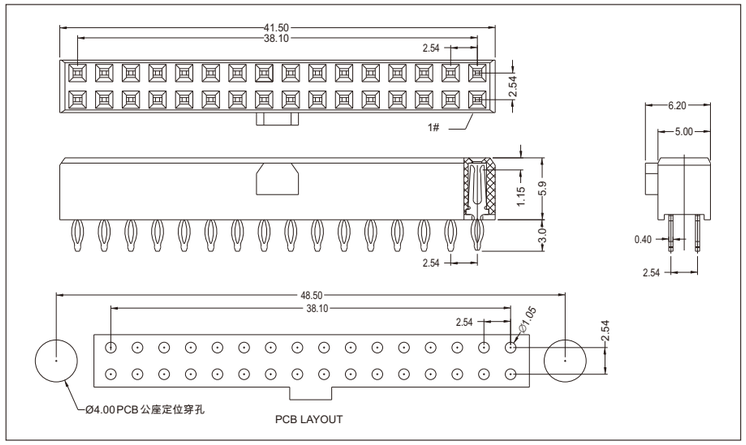

Notes: Please replace "X" with appropriate coding listed in the tables below

2 1 4 — 3 2 F A — 0 2 7 C — 1 0 0

Contact Material

Code	Definition
2	Brass
7	Phosphor

Contact plating

Code	Definition	
	Termination	Contact
C	Tin plated	Au5u"
M	Tin plated	Au30u"

Insulator material

Code	Definition
1	LCP

Mark

Code	Definition
0	No mark
1	Nextron

Note: Dimensions are shown in Millimeters .Dimensions are for reference only.

Tel: +86-755-2605-2427 Fax: +86-755-2642-6035 Email:sales@jhjm.cc Internet: http://www.jhjm.cc

214 Series

2.54mm Female Header , Double Row , Straight

Technical Data

Material

- Contact: Copper Alloy
- Plating: (Contact) 1.25um/ 50 u" nickel gold and tin plating see table below
- Insulator body: Glass filled polyester UL 94V-0

Applications and Features

- Power signal transmission
- Low end servers
- DASD (Direct Access Storage) systems/arrays
- Mates with 400-BH20-0C2E-000

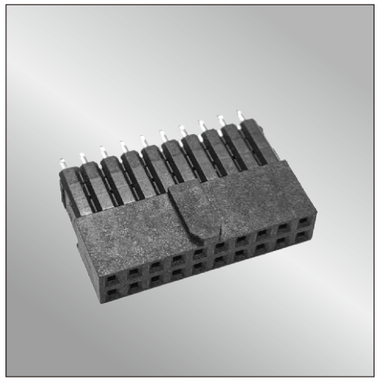

Electrical

- Current rating: 3.0 Amp AC,DC
- Contact resistance: 20mΩ max
- Insulation resistance: 1000MΩ min
- Dielection withstanding Voltage: 1000VAC RMS

Mechanical

- Operating Temperature: -40°C to 105°C

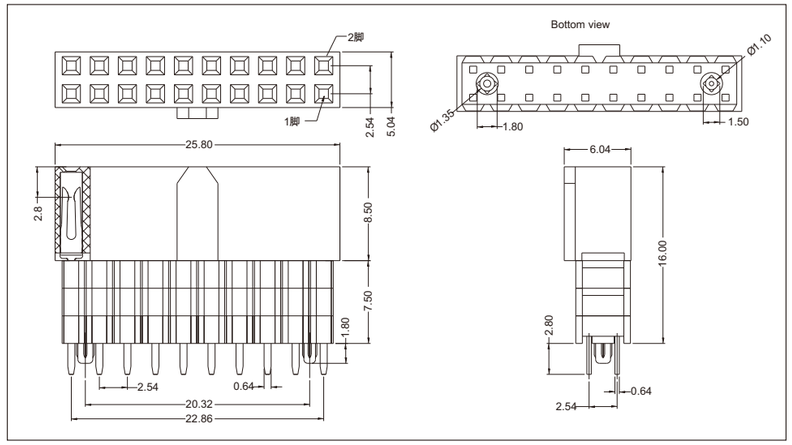

Notes: Please replace "X" with appropriate coding listed in the tables below

2 1 4 — 2 0 A 7 — N 6 7 E — 1 0 0

Contact Material

Code	Definition
2	Brass
7	Phosphor

Contact plating

Code	Definition	
	Termination	Contact
E	Tin plated	Au15u"
M	Tin plated	Au30u"

Insulator material

Code	Definition
1	LCP

Mark

Code	Definition
0	No mark
1	Nextron

Note: Dimensions are shown in Millimeters .Dimensions are for reference only.

Tel: +86-755-2605-2427 Fax: +86-755-2642-6035 Email:sales@jhjm.cc Internet: http://www.jhjm.cc

214 Series

2.54mm Female Header , Double Row , Straight

Technical Data

Material

- Contact: Copper Alloy
- Plating: (Contact) 1.25um/ 50 u" nickel gold and tin plating see table below
- Insulator body: Glass filled polyester UL 94V-0

Applications and Features

- Power signal transmission
- Low end servers
- DASD (Direct Access Storage) systems/arrays
- Mates with 400-BL20-0E22-100

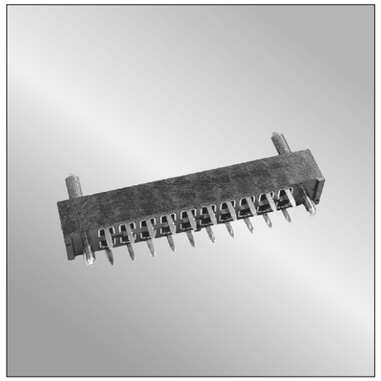

Electrical

- Current rating: 3.0 Amp AC,DC
- Contact resistance: 20mΩ max
- Insulation resistance: 1000MΩ min
- Dielection withstanding Voltage: 1000VAC RMS

Mechanical

- Operating Temperature: -40°C to 105°C

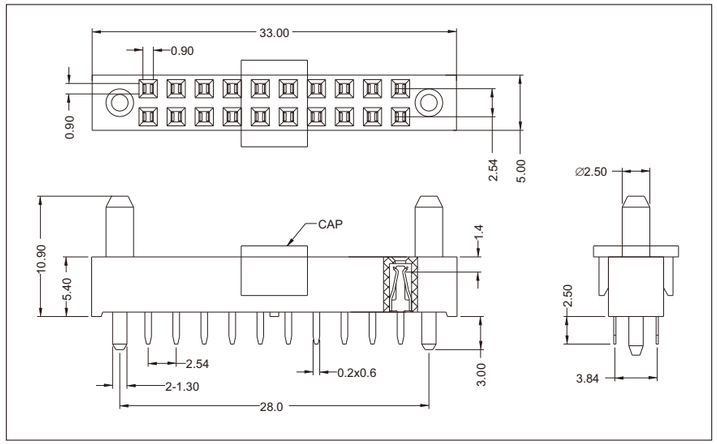

Notes: Please replace "X" with appropriate coding listed in the tables below

2 1 4 — 2 0 1 8 — 1 8 7 E — 1 0 0

Contact Material

Code	Definition
2	Brass
7	Phosphor

Contact plating

Code	Definition	
	Termination	Contact
E	Tin plated	Au15u"
M	Tin plated	Au30u"

Insulator material

Code	Definition
1	LCP

Mark

Code	Definition
0	No mark
1	Nextron

Note: Dimensions are shown in Millimeters .Dimensions are for reference only.

Tel: +86-755-2605-2427 Fax: +86-755-2642-6035 Email:sales@jhjm.cc Internet: http://www.jhjm.cc

214 Series

5.08mm Custom connector , Single Row, Straight

Technical Data

Material

- Contact: Copper Alloy
- Plating: (Contact) 1.25um/ 50 u" nickel gold and tin plating see table below
- Insulator body: Glass filled polyester UL 94V-0

Applications and Features

- Low power connector
- Low end servers
- DASD (Direct Access Storage) systems/arrays
- Mates with 400-BH02-0D21-100

Electrical

- Current rating: 3.0 Amp AC,DC
- Contact resistance: 20mΩ max
- Insulation resistance: 1000MΩ min
- Dielection withstanding Voltage: 1000VAC RMS

Mechanical

- Operating Temperature: -40°C to 105°C

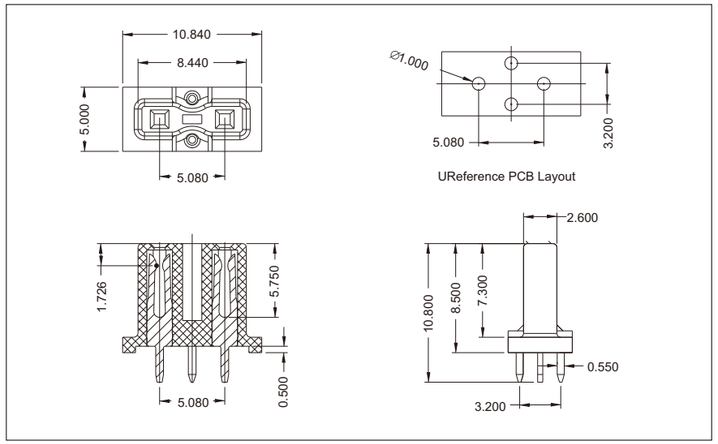

Notes: Please replace "X" with appropriate coding listed in the tables below

4 0 0 — F M M 2 — 0 D 7 1 — 1 0 0

Contact Material

Code	Definition
2	Brass
7	Phosphor

Contact plating

Code	Definition(Contact)
1	Au1u"
2	Au3u"

Insulator material

Code	Definition
1	LCP

Mark

Code	Definition
0	No mark
1	Nextron

Note: Dimensions are shown in Millimeters .Dimensions are for reference only.

Tel: +86-755-2605-2427 Fax: +86-755-2642-6035 Email:sales@jhjm.cc Internet: http://www.jhjm.cc

230 Series

Headers With Ejector Latches
Pitch: 2.54mm/0.10"

Technical Data

Material
- Contact: Copper Alloy
- Plating: (Contact) 1.25 μm / 50 μ" nickel gold and tin plating see table below
- Insulator body: Glass filled polyester UL 94V-0

Electrical
- Current rating: 3.0 Amp.
- Contact resistance: 30mΩ max at DC 100 mA
- Insulation resistance: 1000MΩ min
- Dielection withstanding Voltage: 500 VAC RMS SEA Level

Mechanical
- Operating Temperature: -40℃ to +105℃
- Mating cycle: ≥250 mating cycle

Application and Features
- Contacts available in Phosphor bronze and brass.
- Both vertical mount and right angle mount are available.
- Plug connector with and without eject latch.
- Center coding.
- The connector are available for press-fit, solder and THR process.

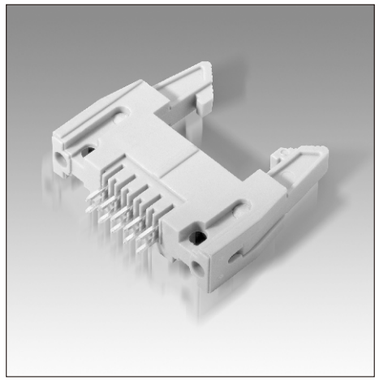

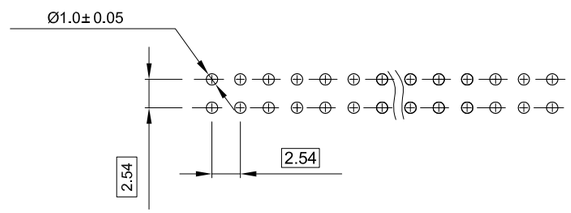

PCB LAYOUT

N=No.of contacts

Notes: Please replace "X" with appropriate coding listed in the tables below

230 — XXX — XXX — XXX

Contacts material

Code	Definition
0	Brass

Solder tail

Code	Definition
1	3.40

Contacts type

Code	Definition
0	Straight
1	Right Angle

Color of housing

Code	Definition
0	Black
6	Blue
8	Grey

No.of contacts

8,10,14,16
20,26,30
34,40,50
60,64

Ejector latch option

Code	Definition
0	No latch required
1	Short
2	Long

Pin style

Code	Definition
0	Arrow type
1	Press fit

Contact plated

Code	Definition
1	Full Tin Sn 120 u"
2	Full Gold Flash
3	Full Gold 10 u"
4	Full Gold 15 u"
5	Full Gold 30 u"
9	Full Gold 3 u"
A	Full Gold 5 u"

Note: Dimensions are shown in Millimeters .Dimensions are for reference only.

230 Series

Headers With Ejector Latches
Pitch: 2.54mm/0.10"

Technical Data

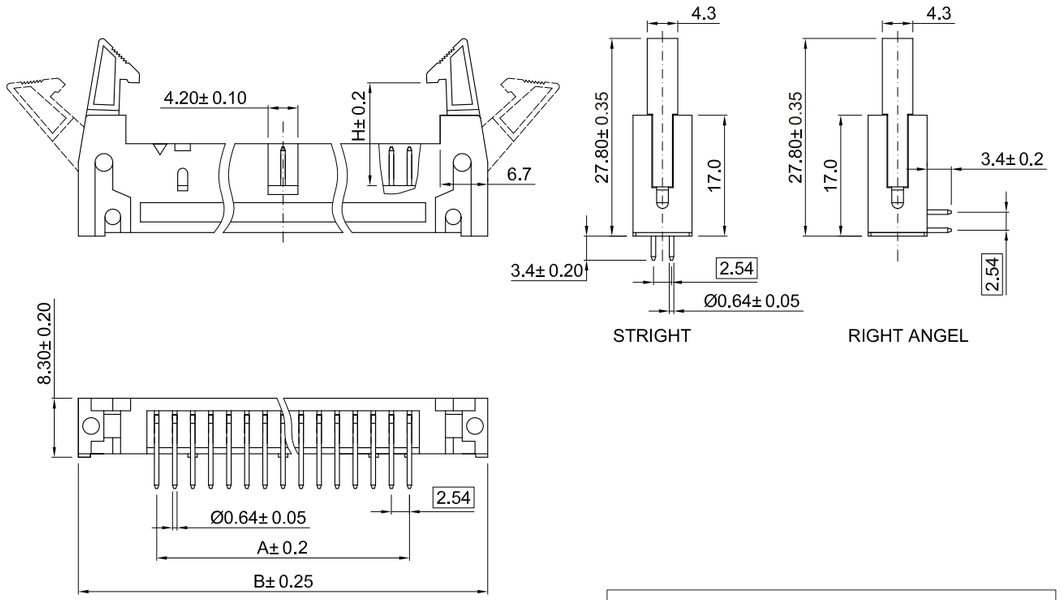

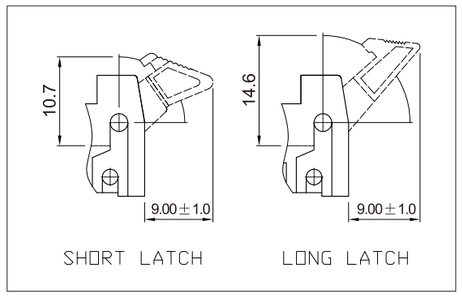

PIN	DimA± 0.20	DimB± 0.25
8	7.62	29.46
10	10.16	32.00
14	15.24	37.10
16	17.78	39.60
20	22.86	44.70
26	30.48	52.30
30	35.56	57.40
34	40.64	62.50
40	48.26	70.10
50	60.96	82.85
60	73.66	95.40
64	78.74	100.48

N=No.of contacts

Note: Dimensions are shown in Millimeters .Dimensions are for reference only.

nextron®

230 Series

Headers With Ejector Latches
Pitch: 2.54mm/0.10"

Technical Data

Material
- Contacts: Copper Alloy
- Plating: (Contact) 1.25um/ 50 u" nickel gold and tin plating see table below
- Insulator body: Glass filled polyester UL 94V-0

Electrical
- Current rating: 3.0Amp
- Contact resistance: 30mΩ max
- Insulation resistance: 1000MΩ min
- Dielection Withstanding Voltage: 500VAC RMS

Mechanical
- Operating Temperature: -40°C to 105°C
- Mating cycle: ⩾250 mating cycle

Applications and Features
- Contacts available in Phosphor bronze and Brass .
- Both vertical mount and right angle mount are available.
- Plug connector with and without eject latch.
- Center coding.
- The connector are available for press-fit, solder and THR process.

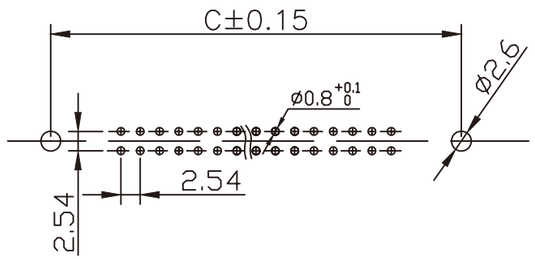

PCB LAYOUT

Notes: Please replace "X" with appropriate coding listed in the tables below

2 3 0 — X F X — X X X — X X X — H

Contacts Material

Code	Definition
0	Brass

Signal tail

Code	Definition
F	3.20mm

Contact type

Code	Definition
1	Straight
2	Right angle

Color of housing

Code	Definition
0	BLACK
6	Blue
8	Gray

NO.of contacts

6,8,10,14,16 20,24,26,30 34,40,50 60,54

Ejector latch option

Code	Definition
0	No latch required
1	Short
2	Long

Pin style

Code	Definition
0	Arrow type
1	Press fit

Contact plated

Code	Definition	Solder tail
H	Gold 1u"	Matte tin
Y	Gold 3u"	Matte tin
J	Gold 6u"	Matte tin

Note: Dimensions are shown in Millimeters .Dimensions are for reference only.

nextron®
Tel: +86-755-2605-2427 Fax: +86-755-2642-6035 Email:sales@jhjm.cc Internet: http://www.jhjm.cc

nextron®

230 Series

Headers With Ejector Latches
Pitch: 2.54mm/0.10"

Technical Data

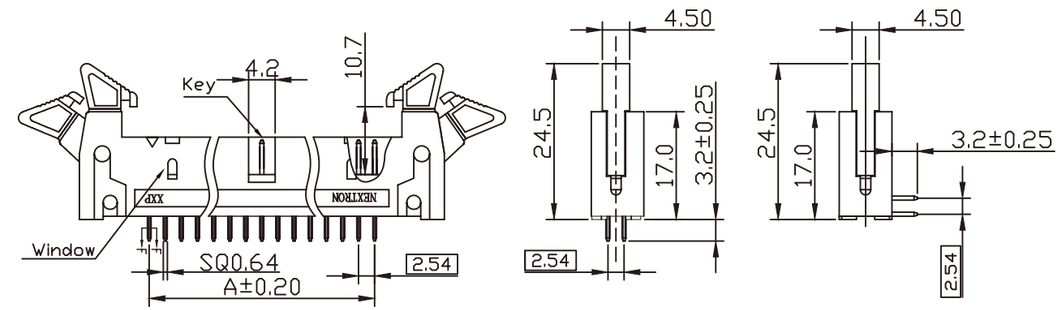

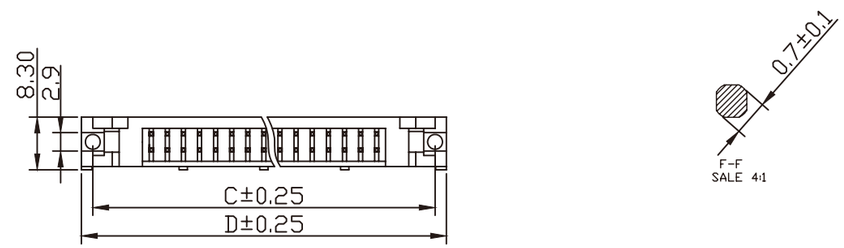

PIN	A±0.20	B±0.25	C±0.25	D±0.25
6	5.08	16.76	22.86	26.92
8	7.62	19.30	25.40	29.46
10	10.16	21.84	27.94	32.00
14	15.24	26.92	33.02	37.08
16	17.78	29.46	35.56	39.62
20	22.86	34.54	40.64	44.70
24	27.94	39.62	45.72	49.78
26	30.48	42.16	48.26	52.32
30	35.56	47.24	53.34	57.40
34	40.64	52.32	58.42	62.48
40	48.26	59.94	66.04	70.10
50	60.96	72.64	78.74	82.80
60	73.66	85.35	91.44	95.50
64	78.74	90.42	96.52	100.58

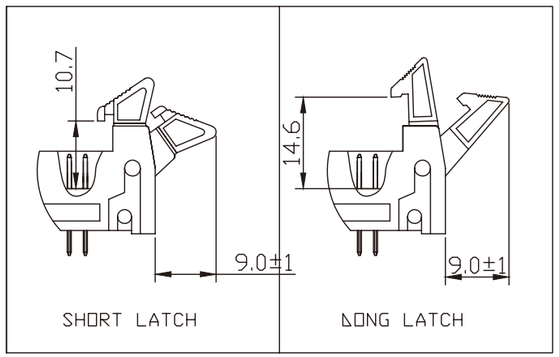

N=No.of contacts

Note: Dimensions are shown in Millimeters .Dimensions are for reference only.

nextron®
Tel: +86-755-2605-2427 Fax: +86-755-2642-6035 Email:sales@jhjm.cc Internet: http://www.jhjm.cc

231 Series

Box Header
Pitch: 2.54mm/0.10"

Technical Data

Material
- Contact: Copper Alloy
- Plating: (contact) 1.25 μm /50 μ" nickel gold and tin plating see table below
- Insulator body: Glass filled polyester UL 94 V-0

Electrical
- Current rating: 3.0 Amp.
- Contact resistance: 20mΩ max
- Insulation resistance: 1000MΩ min
- Withstanding voltage: 1000VAC RMS

Mechanical
- Operating Temperature: -40℃ to +105℃
- Mating cycle: ⩾250 mating cycle

Applications and Features
- Contacts available in Phosphor bronze And brass.
- Both vertical mount and right angle mount are available.
- Low profile type.
- Center coding.

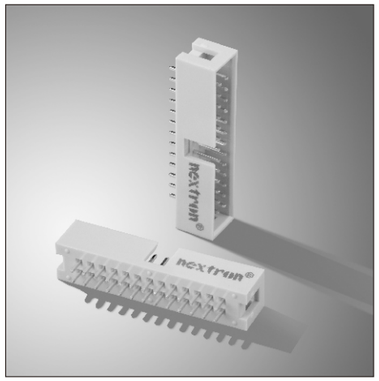

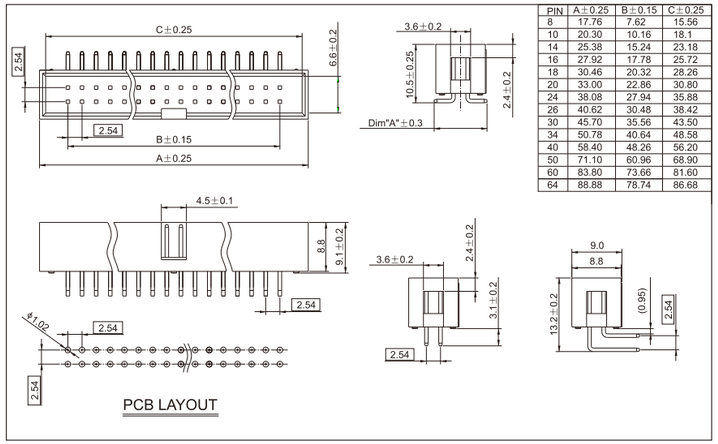

PIN	A±0.25	B±0.15	C±0.25
8	17.76	7.62	15.56
10	20.30	10.16	18.1
14	25.38	15.24	23.18
16	27.92	17.78	25.72
18	30.46	20.32	28.26
20	33.00	22.86	30.80
24	38.08	27.94	35.88
26	40.62	30.48	38.42
30	45.70	35.56	43.50
34	50.78	40.64	48.58
40	58.40	48.26	56.20
50	71.10	60.96	68.90
60	83.80	73.66	81.60
64	88.88	78.74	86.68

Notes: Please replace "X" with appropriate coding listed in the tables below

2 3 1 — X X X — 0 X X — X 0 X

Contacts material

Code	Definition
0	Brass

Solder tail (Dim"D")

Code	Definition
1	3.10 (Standard)
2	4.50
6	9.5

Contacts type

Code	Definition
1	Straight
2	Right Angle
3	SMT

Insulator color

Code	Definition
0	Black
8	Grey

No.of contacts: 8,10,14,16, 20,26,30, 34,40,50, 60,64

Insulator material

Code	Definition
1	PBT
3	PA6T

Contact plated

Code	Definition
1	Full Tin Sn 120 u"
2	Full Gold Flash
3	Full Gold 10 u"
4	Full Gold 15 u"
5	Full Gold 30 u"
6	Full Gold 3 u"
7	Sel Sn/Au 10 u"
8	Sel Sn/Au 5 u"
9	Sel Sn/Au 30 u"

Note: Dimensions are shown in Millimeters .Dimensions are for reference only.

Tel: +86-755-2605-2427 Fax: +86-755-2642-6035 Email:sales@jhjm.cc Internet: http://www.jhjm.cc

232 Series

Box Header
Pitch: 2.00mm/0.07874"

Technical Data

Material
- Contact: Copper Alloy
- Plating: (contact) 1.25 μm /50 μ" nickel gold and tin plating see table below
- Insulator body: Glass filled polyester UL 94 V-0

Electrical
- Current rating: 1.0 Amp
- Contact resistance: 20mΩ max
- Insulation resistance: 1000MΩ min
- Dielection Withstanding voltage: 500VAC RMS

Mechanical
- Operating Temperature: -40℃ to +125℃
- Mating cycle: ⩾250 mating cycle

Applications and Features
- Contacts available in Phosphor bronze and brass.
- Both vertical mount and right angle mount are available.
- Low profile type.
- Center coding.

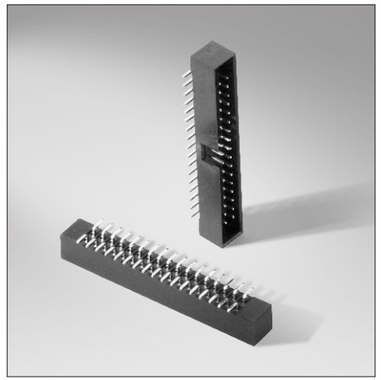

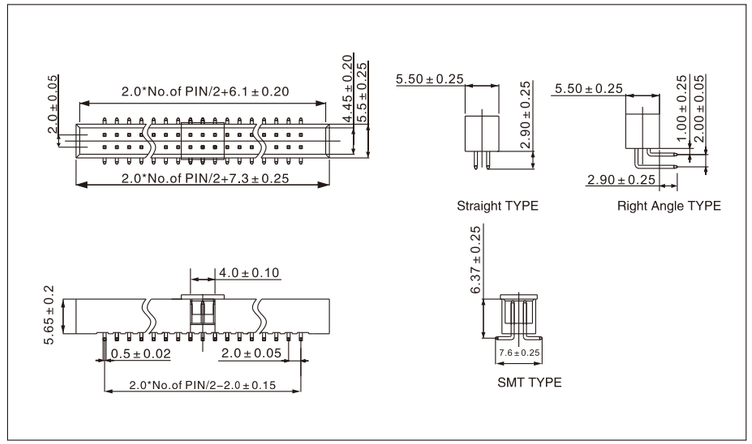

Notes: Please replace "X" with appropriate coding listed in the tables below

2 3 2 — X X X X — 0 0 2 X — X X X

No.of contacts: 10,14,16, 20, 26, 30, 34,40, 50, 60,64

Pin type

Code	Definition
1	Straight
2	Right Angle
3	SMT Type

Pin length

Code	Definition
1	7.62
2	2.90

Contact material

Code	Definition
2	Brass

Contact plated

Code	Definition
1	Gold Flash
2	Gold 3 u"
3	Gold 5 u"
4	Gold 10 u"
5	Gold 15 u"

Insulator material

Code	Definition
0	PBT
1	LCP

Insulator color

Code	Definition
0	Black
8	Grey

Mark

Code	Definition
0	No mark
1	Nextron

Note: Dimensions are shown in Millimeters .Dimensions are for reference only.

Tel: +86-755-2605-2427 Fax: +86-755-2642-6035 Email:sales@jhjm.cc Internet: http://www.jhjm.cc

234 Series

Headers With Ejector Latches
Pitch: 2.00mm/0.07874"

Technical Data

Material

- Contact: Copper Alloy
- Plating: (Contact) 1.25μm / 50μ" nickel gold and tin plating see table below
- Boardlock: Copper Alloy
- Plating: (Boardlock) 1.25μm/ 50μ" nickel tin plating
- Insulator body: Glass filled polyester UL 94V-0

Electrical

- Current rating: 1.0 Amp.
- Contact resistance: 20mΩ max
- Insulation resistance: 1000MΩ min
- Dielection withstanding Voltage: 500VAC RMS

Mechanical

- Operating Temperature: -40℃ to +105℃
- Mating cycle: ⩾250 mating cycle

Applications and Features

- Contacts available in Phosphor bronze (FISK) and Brass (CuZn).
- Straight mount , right angle mount and SMT are available.
- Plug connector with and without eject latch.
- Center coding.
- The connector are available for press-fit, solder and THR process.

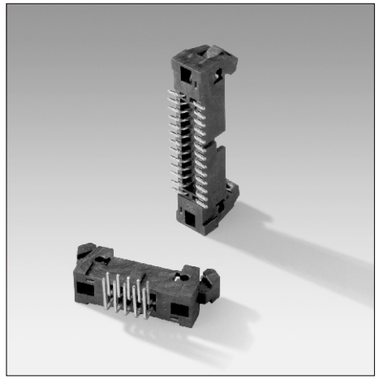

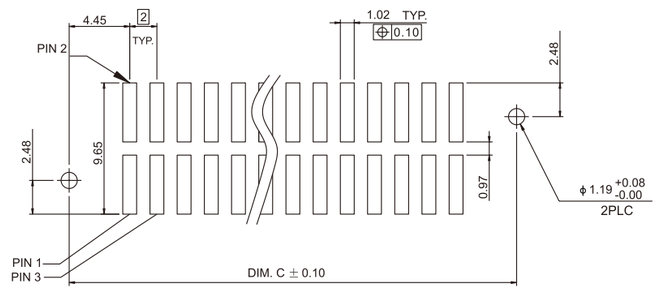

RECOMMENDED PCB LAYOUT(SMT version)
PCB TOLERANCE: ± 0.05

Notes: Please replace "X" with appropriate coding listed in the tables below

234 — XXXX — X0XX — XX0

No.of contacts	Pin type		Latch type		DIM "D"		Contact material		Contact plated			Insulator material		Insulator color		Mark	
	Code	Definition	Code	Definition	Code	Definition	Code	Definition	Code	Contact area	Solder tail	Code	Definition	Code	Definition	Code	Definition
10,16 20,24 26,30 34,40 44,50	1	Straight	0	With latch	1	2.9	2	Brass	L	Gold 15 μ"	Matte tin	1	LCP	0	Black	0	No mark
	2	Right Angle	1	Without latch	2	3.05	7	Phosphor Bronze	M	Gold 30 μ"	Matte tin					1	Nextron
	3	SMT			3	8.89			E	Gold 15 μ"	Light tin						
									F	Gold 30 μ"	Light tin						

Note: Dimensions are shown in Millimeters .Dimensions are for reference only.

nextron®
Tel: +86-755-2605-2427 Fax: +86-755-2642-6035 Email:sales@jhjm.cc Internet: http://www.jhjm.cc

234 Series

Headers With Ejector Latches
Pitch: 2.00mm/0.07874"

Technical Data

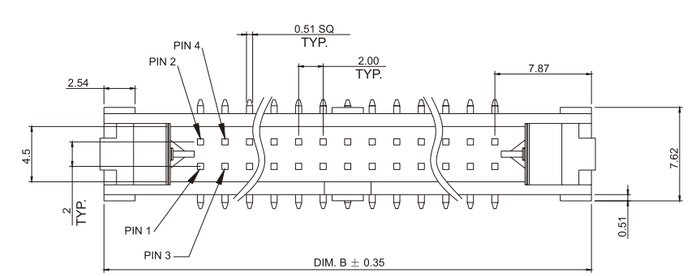

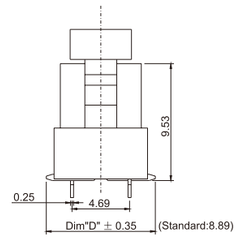

SMT

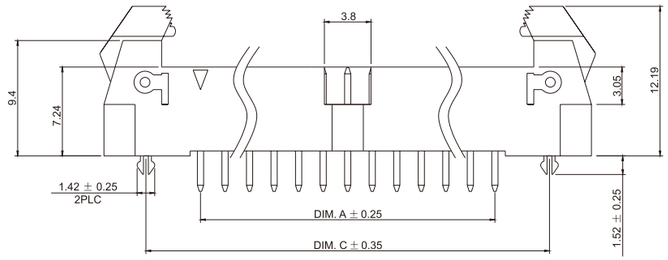

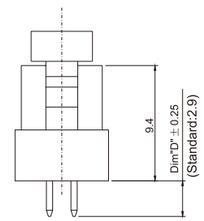

STRAIGHT

50P	48.00	63.74	56.90
44P	42.00	57.74	50.90
40P	38.00	53.74	46.90
34P	32.00	47.74	40.90
30P	28.00	43.74	36.90
26P	24.00	39.74	32.90
24P	22.00	37.74	30.90
20P	18.00	33.74	26.90
16P	14.00	29.74	22.90
10P	8.00	23.74	16.90
POS. NO.	A	B	C
	DIMENSION		

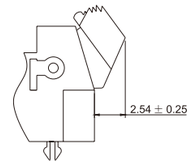

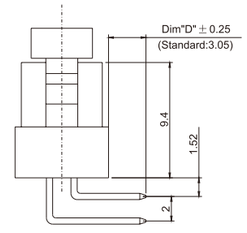

RIGHT ANGLE

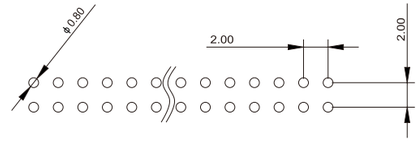

RECOMMENDED PCB LAYOUT(Straight and R/A)
PCB TOLERANCE: ± 0.05

Note: Dimensions are shown in Millimeters .Dimensions are for reference only.

nextron®
Tel: +86-755-2605-2427 Fax: +86-755-2642-6035 Email:sales@jhjm.cc Internet: http://www.jhjm.cc

235 Series

Headers With Ejector Latches
Pitch: 1.27mm/0.05"

Technical Data

Material
- Contact: Copper Alloy
- Plating: (Contact) 1.25μm / 50μ" nickel gold and tin plating see table below
- Boardlock: Copper Alloy
- Plating: (Boardlock) 1.25μm/ 50μ" nickel tin plating
- Insulator body: Glass filled polyester UL 94V-0

Electrical
- Current rating: 1.0 Amp
- Contact resistance: 20mΩ max
- Insulation resistance: 1000MΩ min
- Dielection withstanding Voltage: 500VAC RMS

Mechanical
- Operating Temperature: -40℃ to +125℃
- Mating cycle: ≥250 mating cycle

Applications and Features
- Contacts available in Phosphor bronze and Brass.
- Straight mount , right angle mount and SMT are available.
- Plug connector with and without eject latch.
- Center coding.
- The connector are available for press-fit, solder and THR process.

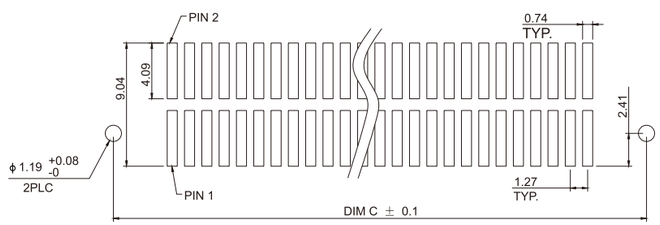

RECOMMENDED PCB LAYOUT(SMT version)

PCB TOLERANCE: ± 0.05

Notes: Please replace "X" with appropriate coding listed in the tables below

235 — XXXX — X0XX — XX0

No.of contacts	Pin type		Latch type		DIM "D"		Contact material		Contact plated			Insulator material		Insulator color		Mark	
	Code	Definition	Code	Definition	Code	Definition	Code	Definition	Code	Contact area	Solder tail	Code	Definition	Code	Definition	Code	Definition
06,08	1	Straight	0	With latch	1	2.9	2	Brass	L	Gold 15 μ"	Matte tin	1	LCP	0	Black	0	No mark
10,16	2	Right Angle	1	Without latch	2	3.05	7	Phosphor Bronze	M	Gold 30 μ"	Matte tin					1	Nextron
20,26	3	SMT			3	7.52			E	Gold 15 μ"	Light tin						
34,40									F	Gold 30 μ"	Light tin						
50																	

Note: Dimensions are shown in Millimeters .Dimensions are for reference only.

235 Series

Headers With Ejector Latches
Pitch: 1.27mm/0.05"

Technical Data

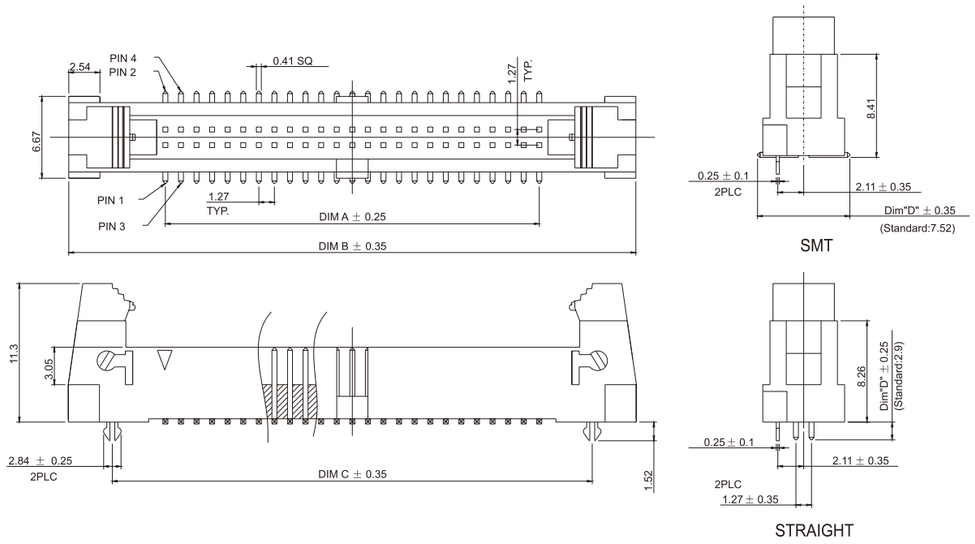

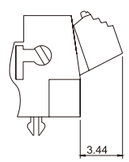

POS. NO.	A	B	C
	DIMENSION		
50P	30.48	46.23	39.12
40P	24.13	39.88	32.77
34P	20.32	36.07	28.96
26P	15.24	30.99	23.88
20P	11.43	27.18	20.07
16P	8.89	24.64	17.53
10P	5.08	20.83	13.72
8P	3.81	19.56	12.45
6P	2.54	18.29	11.18

RECOMMENDED PCB LAYOUT(Straight and R/A)

PCB TOLERANCE: ± 0.05

Note: Dimensions are shown in Millimeters .Dimensions are for reference only.

235 Series

Headers With Ejector Latches
Pitch: 1.27mm/0.05"

Technical Data

Material

- Contact: Copper Alloy
- Plating: (Contact) 1.25um/ 50 u" nickel gold and tin plating see table below
- Boardlock: Copper Alloy
- Plating: (Boardlock) 1.25um/ 50 u" nickel tin plating
- Insulator body: Glass filled polyester UL 94V-0

Electrical

- Current rating: 1 Amp
- Contact resistance: 20mΩ max
- Insulation resistance: 1000MΩ min
- Dielection withstanding Voltage: 500V AC for 1 minute
- Rate voltage: 125V

Mechanical

- Operating Temperature: -55°C to 125°C
- Mating cycle: >50 mating cycle

Applications and Features

- Straight mount , right angle mount and SMT are available.
- Plug connector with and without eject latch.
- Center coding.
- The connector are available for solder and THR process.

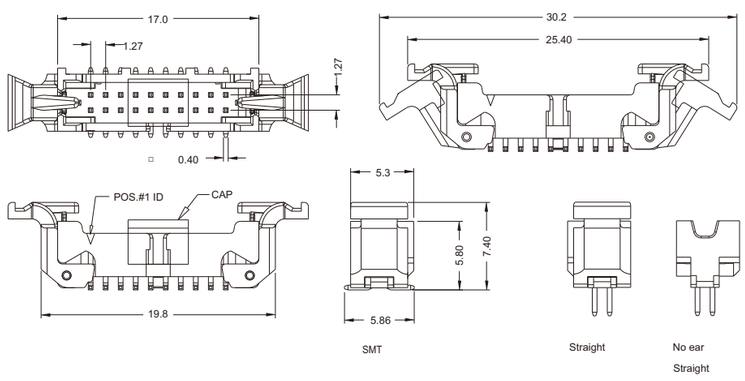

Notes: Please replace "X" with appropriate coding listed in the tables below

2 3 5 — 2 0 X A — 0 0 7 J — 1 0 0

NO. of contacts

20 (exist)
Extens
26,36
40, 50
60, 68
80, 100

Pin type

Code	Definition
1	Straight
3	SMT

Foot length

Code	Definition
0	standard
5	2.40mm

Contact type

Code	Definition
0	Eared
A	No ear

Contact Material

Code	Definition
3	Brass
7	Phosphor

Contact plating

Code	Definition	
	Termination	Contact
J	Tin plated	Au5u"
M	Tin plated	Au30u"

Insulator material

Code	Definition
1	LCP

Mark

Code	Definition
0	No mark
1	Nextron

Note: Dimensions are shown in Millimeters .Dimensions are for reference only.

Tel: +86-755-2605-2427 Fax: +86-755-2642-6035 Email:sales@jhjm.cc Internet: http://www.jhjm.cc

235 Series

Headers With Ejector Latches
Pitch: 1.27mm/0.05"

Technical Data

Material

- Contact: Copper Alloy
- Plating: (Contact) 1.25um/ 50 u" nickel gold and tin plating see table below
- Boardlock: Copper Alloy
- Plating: (Boardlock) 1.25um/ 50 u" nickel tin plating
- Insulator body: Glass filled polyester UL 94V-0

Electrical

- Current rating: 1 Amp
- Contact resistance: 20mΩ max
- Insulation resistance: 1000MΩ min DC
- Dielection withstanding Voltage: 500V AC for 1 minute
- Rate voltage: 125V AC

Mechanical

- Operating Temperature: -55°C to 125°C
- Mating cycle: >50 mating cycle

Applications and Features

- Straight mount , right angle mount and SMT are available.
- Plug connector with and without eject latch.
- Center coding.
- The connector are available for solder and THR process.

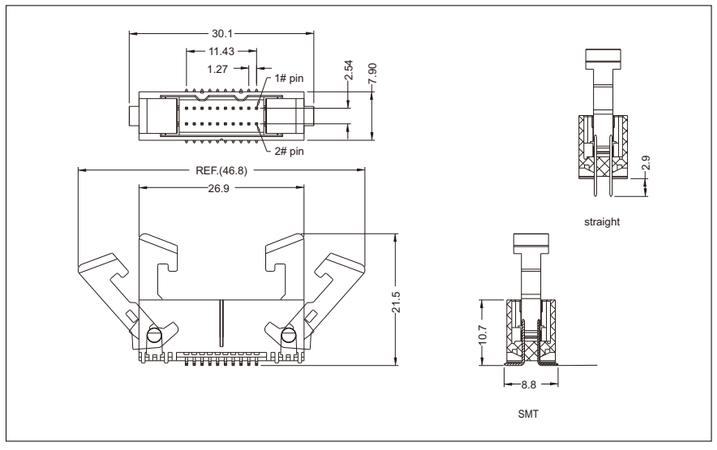

Notes: Please replace "X" with appropriate coding listed in the tables below

2 3 5 — 2 0 3 X — 0 S 7 X — 1 0 0

NO. of contacts

20 (exist)
Extens
26,36
40,50
60,68
80,100

Pin type

Code	Definition
1	Straight
3	SMT

Contact type

Code	Definition
S	1.27X2.54

Foot length

Code	Definition
0	standard
1	2.90mm

Contact Material

Code	Definition
3	Brass
7	Phosphor

Contact plating

Code	Definition	
	Termination	Contact
J	Tin plated	Au5u"
M	Tin plated	Au30u"

Insulator material

Code	Definition
1	LCP

Mark

Code	Definition
0	No mark
1	Nextron

Note: Dimensions are shown in Millimeters .Dimensions are for reference only.

Tel: +86-755-2605-2427 Fax: +86-755-2642-6035 Email:sales@jhjm.cc Internet: http://www.jhjm.cc

244/243 Series

2.00mm Female Header ,Double Row, Straight/SMT

Technical Data

Material

- Contact: Copper Alloy
- Plating: (Contact) 1.25um/ 50 u" nickel gold and tin plating see table below
- Insulator body: Glass filled polyester UL 94V-0

Electrical

- Current rating: 1.5 Amp AC,DC
- Contact resistance: 20mΩ max
- Insulation resistance: 1000MΩ min
- Dielection withstanding voltage: 500VAC RMS

Mechanical

- Operating Temperature: -40℃ to +105℃

Applications and Features

- Desktop/Deskside Pcs
- Low end servers
- DASD (Direct Access Storage) systems/arrays
- Point-to-point link with hot-plugging capability
- Mates with 0.025(0.64)square

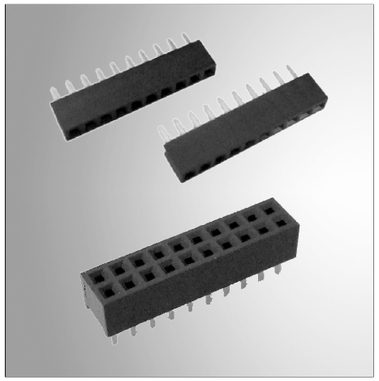

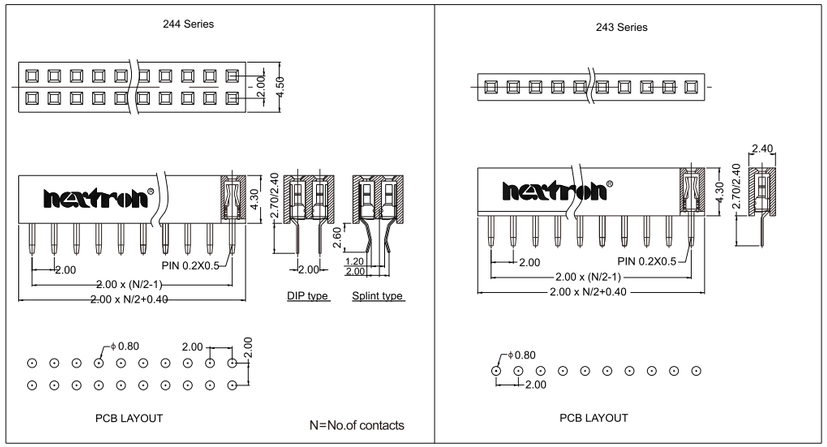

Notes: Please replace "X" with appropriate coding listed in the tables below

2 4 X — X X X 0 — 0 2 7 X — 3 X X

NO. of contacts
02~80

Pin type

Code	Definition
1	Straight
D	Splint type

Contact Material

Code	Definition
7	Phosphor Bronze

Contact Plated

Code	Definition	Code	Definition
1	Gold/Flash	A	Gold 1u"/Light Tin
2	Gold 3u"	B	Gold 3u"/Light Tin
3	Gold 5u"	C	Gold 5u"/Light Tin
4	Gold 10u"	D	Gold 10u"/Light Tin
5	Gold 15u"	E	Gold 15u"/Light Tin
6	Gold 30u"	F	Gold 30u"/Light Tin

Insulator material

Code	Definition
0	PBT
2	PA 66
3	PA 46
4	PA 6T

Insulator Color

Code	Definition
0	BLACK

Mark

Code	Definition
0	No mark
1	Nextron

Note: Dimensions are shown in Millimeters .Dimensions are for reference only.

Tel: +86-755-2605-2427 Fax: +86-755-2642-6035 Email:sales@jhjm.cc Internet: http://www.jhjm.cc

WF Series

Board to board connector / double row Socket
Pitch:1.0mmX2.66mm/0.039"0.105"

Technical Data

Material

- Contact: Copper Alloy Standard-Brass
- Plating: (Contact) 1.25um/ 50 u" nickel gold and tin plating see table below
- Insulator body: Glass filled polyester UL 94V-0 Standard-LCP

Electrical

- Current rating: 3 Amp
- Contact resistance: 20mΩ max
- Insulation resistance: 1000MΩ min DC
- Dielection withstanding Voltage: 500V AC for 1 minute
- Rate voltage: 250V AC

Mechanical

- Operating Temperature: -55°C to 125°C
- Mating cycle: >50 mating cycle

Applications and Features

- The product has a certain floating tolerance. After the male and female are matched, the x-axis, Y-axis direction is plus or minus 0.5mm, and the z-axis tolerance is plus or minus 1mm;
- The connector are available for solder and THR process.

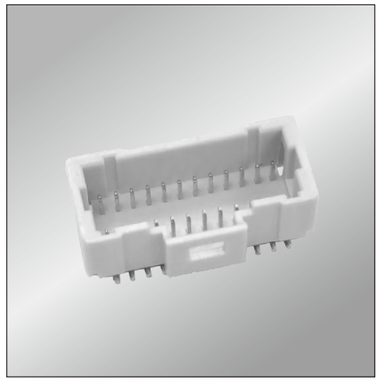

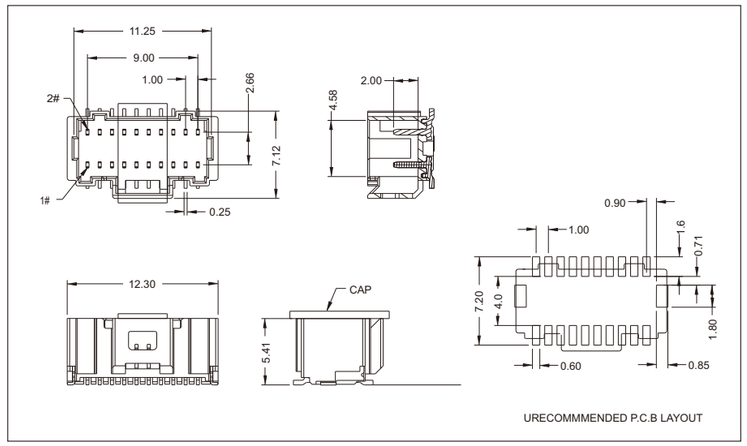

Notes: Please replace "X" with appropriate coding listed in the tables below

2 5 0 — 1 0 2 0 — S 0 7 3 — 1 0 0

Contact Material

Code	Definition
2	Brass
7	Phosphor

Contact plating

Code	Definition	
	Termination	Contact
3	Tin plated	Au5u"

Insulator material

Code	Definition
1	LCP

Mark

Code	Definition
0	No mark
1	Nextron

Note: Dimensions are shown in Millimeters .Dimensions are for reference only.

Tel: +86-755-2605-2427 Fax: +86-755-2642-6035 Email:sales@jhjm.cc Internet: http://www.jhjm.cc

nextron®

470 Series

DC POWER JACK

Technical Data

Material

- Contact: Copper Alloy
- Plating: (Contact) 1.25um/ 50 u" nickel gold plating see table below
- Insulator body: Glass filled polyester UL 94V-0

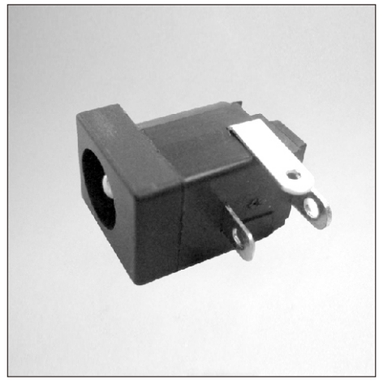

Electrical

- Current rating: 3.0 Amp AC,DC
- Contact resistance: 30mΩ max
- Insulation resistance: 1000MΩ min
- Dielection withstanding voltage: 1000VAC RMS

Mechanical

- Insertion force: 6kgf Max.
- Withdrawal force: 0.3kgf min
- Insertion With-drawal cycles: 5,000 cycles
- Operating Temperature: -40℃ to +105℃

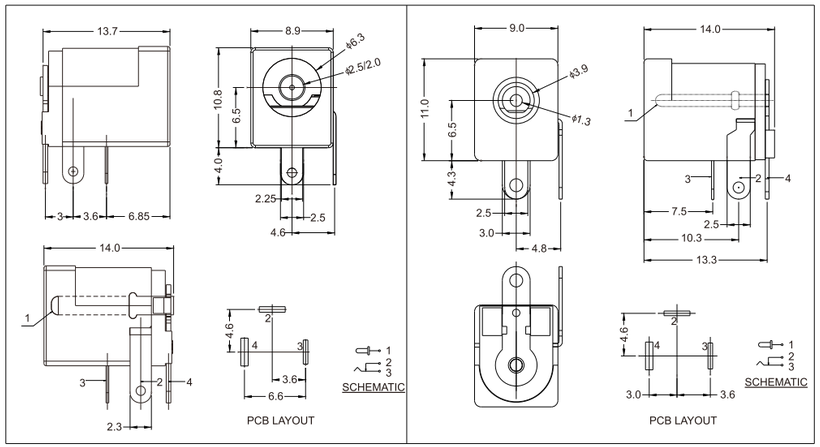

Notes: Please replace "X" with appropriate coding listed in the tables below

D C X — 0 0 5 — X X X X — X X X

type

Code	Definition
R	6.3mm DC POWER JACK (Pin Φ2.00)
6303	6.3mm DC POWER JACK (Pin Φ2.50)
3903	3.9mm DC POWER JACK (Pin Φ1.30)

PIN

Code	Definition
	Pin Φ2.00
250	Pin Φ2.50
130	Pin Φ1.30

Note: Dimensions are shown in Millimeters .Dimensions are for reference only.

nextron®

Tel: +86-755-2605-2427 Fax: +86-755-2642-6035 Email:sales@jhjm.cc Internet: http://www.jhjm.cc

nextron®

470 Series

DC POWER JACK

Technical Data

Material

- Contact: Copper Alloy
- Plating: (Contact) 1.25um/ 50 u" nickel gold plating see table below
- Insulator body: Glass filled polyester UL 94V-0

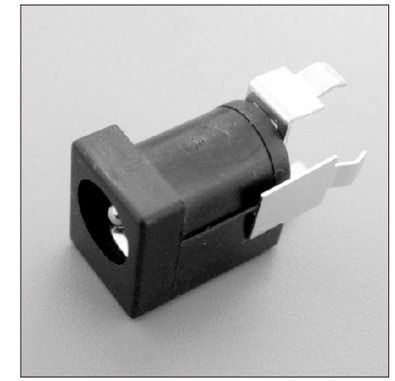

Electrical

- Current rating: 3.0 Amp AC,DC
- Contact resistance: 30mΩ max
- Insulation resistance: 1000MΩ min
- Dielection withstanding voltage: 1000VAC RMS

Mechanical

- Insertion force: 3kgf Max.
- Withdrawal force: 0.3kgf min
- Insertion With-drawal cycles: 5,000 cycles
- Operating Temperature: -40℃ to +105℃

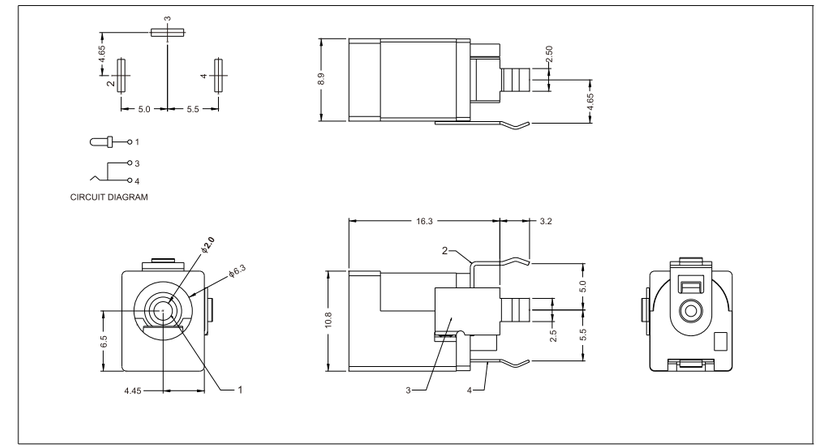

Notes: Please replace "X" with appropriate coding listed in the tables below

D C X — 0 0 5 — R - - - — - K -

type

Code	Definition
R	6.3mm DC POWER JACK (Pin Φ2.00)
6303	6.3mm DC POWER JACK (Pin Φ2.50)
3903	3.9mm DC POWER JACK (Pin Φ1.30)

PIN

Code	Definition
	Pin Φ2.00
250	Pin Φ2.50
130	Pin Φ1.30
K	"K" Type Pin Φ200

Note: Dimensions are shown in Millimeters .Dimensions are for reference only.

nextron®

Tel: +86-755-2605-2427 Fax: +86-755-2642-6035 Email:sales@jhjm.cc Internet: http://www.jhjm.cc

nextron®

810 Series

IDC socket-with stamped and formed contacts
IDC Socket Connectors
For square post header 2.54mm/0.10"

Technical Data

Material

- Contact: Copper Alloy
- Insulator body: Glass filled polyester UL 94V-0
- Strain relief: Polyester UL 94V-0
- Cover: PBT and 30 Fiber reinforced UL 94V-0
- Plating: (Contact) 1.25um/ 50 u" nickel gold and tin plating see table below

Electrical

- Current rating: 1.0 Amp
- Contact resistance: 20mΩ max
- Insulation resistance: 1000MΩ min
- Dielection withstanding Voltage: 500V AC for 1 minute
- Rate voltage: 250V AC

Mechanical

- Insertion force: 300g Max./contact
- Withdrawal force: 40g Min./contact
- Breakage force of cover: 10Kg Min.
- Breakage force of strain relief: 8Kg Min.
- Contact retention force: 225g Min.
- Operating Temperature: -25°C to 105°C

Applications and Features

- Single beam contact.
- Provide fast,easy assembly to flat cable AWG 28.
- Form 8 to 64 position.
- Mates with 0.025(0.64)square or round pin on 0.10 X 0.10(2.54) centers.

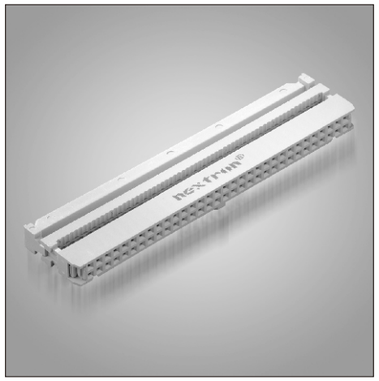

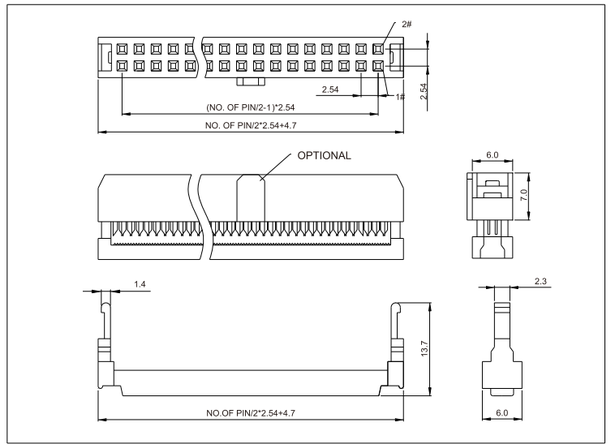

Notes: Please replace "X" with appropriate coding listed in the tables below

8 1 0 — X X X X — X X X — X 0 0 0

NO. of contacts

8~64

Contact plating

Code	Definition: Termination	Definition: Contact
1	Tin plated	Gold Flash

Contact material

Code	Definition
0	Brass
1	Phosphor bronze

Insulatormaterial

Code	Definition
0	PBT

Termination type

Code	Definition
1	IDC type

Relief type

Code	Definition
0	Crimp type without other part
1	Without strain relief
2	With strain relief

Insulator Color

Code	Definition
1	Black
4	Grey

Mark

Code	Definition
0	Nextron
1	No mark

Note: Dimensions are shown in Millimeters .Dimensions are for reference only.

nextron®
Tel: +86-755-2605-2427 Fax: +86-755-2642-6035 Email:sales@jhjm.cc Internet: http://www.jhjm.cc

nextron®

810 Series

Crimping Type IDC Housing And Contacts
For square post header 0.635mm/0.025"

Technical Data

Material

- Contact: Copper Alloy
- Insulator body: Glass filled polyester UL 94V-0
- Strain relief: Polyester UL 94V-0
- Cover: PBT and 30 Fiber reinforced UL 94V-0
- Plating: (Contact) 1.25um/ 50 u" nickel gold and tin plating see table below

Electrical

- Current rating: 1.0 Amp
- Contact resistance: 20mΩ max
- Rate voltage: 250V AC

Mechanical

- Application wires: AWG #28 to #24
- Operating Temperature: -25°C to 105°C

Applications and Features

- Single beam contact.
- Application:wire Awg 24~28
- Form 10 to 64 position.
- Mates with 0.025(0.64)square or round pin on 0.10 X 0.10(2.54) centers.

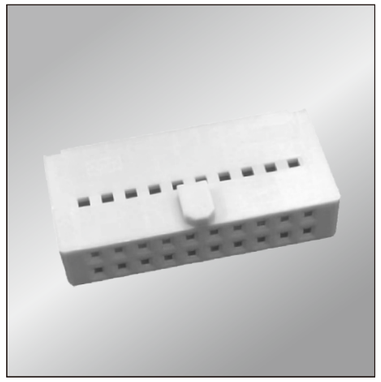

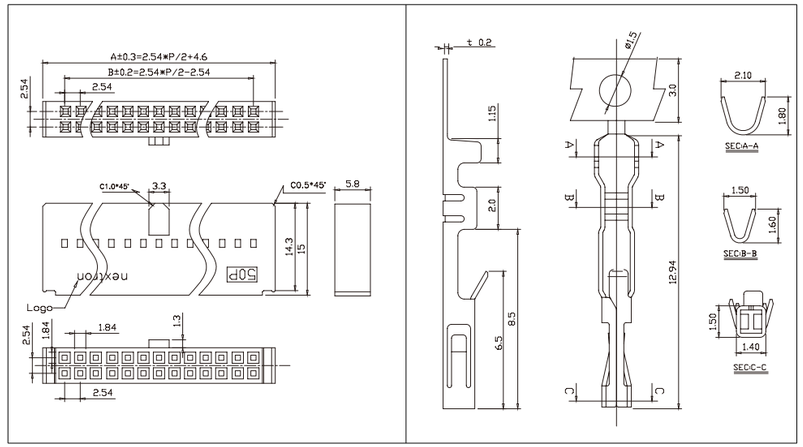

Notes: Please replace "X" with appropriate coding listed in the tables below

B — 8 1 0 — X X 2 1 0 0 0 — X X 1

NO. of contacts

10~64

Insulator material

Code	Definition
0	PBT

Insulator Color

Code	Definition
1	Black
4	Grey

P — 8 1 0 — 1 2 0 0 — 0 0 0 — 0 X X

Contact material

Code	Definition
2	Brass
7	Phosphor Bronze

Contact Plating

Code	Definition
3	Au 5u" / Light Tin
7	Light Tin

Note: Dimensions are shown in Millimeters .Dimensions are for reference only.

nextron®
Tel: +86-755-2605-2427 Fax: +86-755-2642-6035 Email:sales@jhjm.cc Internet: http://www.jhjm.cc

810 Series

IDC socket-with stamped and formed contacts
IDC Socket Connectors

Technical Data

Material

- Contact: Copper Alloy
- Insulator body: Glass filled polyester UL 94V-0
- Strain relief: Polyester UL 94V-0
- Cover: PBT and 30 Fiber reinforced UL 94V-0
- Boardlock: Copper Alloy
- Plating: (Contact) 1.25um/ 50 u" nickel gold and tin plating see table below

Electrical

- Current rating: 1.0 Amp
- Contact resistance: 20mΩ max
- Insulation resistance: 1000MΩ min
- Dielection withstanding voltage: 1000V AC for 1 minute

Mechanical

- Operating Temperature: -25°C to 105°C

Applications and Features

- Single beam contact.
- Form 10 to 64 position.
- Provide fast,easy assembly to flat cable AWG 28.

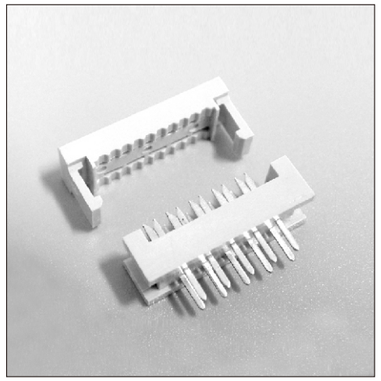

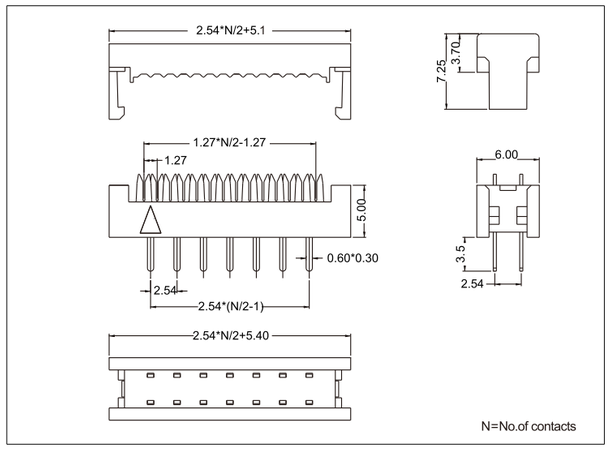

Notes: Please replace "X" with appropriate coding listed in the tables below

8 1 0 — X X X X — 0 5 0 — X 0 0 X

NO. of contacts

10~64

Contact plating

Code	Definition
I	Gold G/F/Ni
K	Gold 3u"/Ni
E	Gold 2u"/Ni

Contact material

Code	Definition
0	Brass

Insulatomaterial

Code	Definition
0	PBT

Termination type

Code	Definition
5	DIP type 7.2H

Relief type

Code	Definition
0	Crimp type without other part
1	Without strain relief
2	With strain relief

Insulator Color

Code	Definition
1	Black
4	Grey

Mark

Code	Definition
0	Nextron
1	No mark

Note: Dimensions are shown in Millimeters .Dimensions are for reference only.

Tel: +86-755-2605-2427 Fax: +86-755-2642-6035 Email:sales@jhjm.cc Internet: http://www.jhjm.cc

812 Series

IDC socket-with stamped and formed contacts
IDC Socket Connectors
For square post header 0.635mm/0.25"

Technical Data

Material

- Contact: Copper Alloy
- Insulator body: Glass filled polyester UL 94V-0
- Strain relief: Polyester UL 94V-0
- Cover: PBT and 30 Fiber reinforced UL 94V-0
- Plating: (Contact) 1.25um/ 50 u" nickel gold and tin plating see table below

Electrical

- Current rating: 0.75 Amp
- Contact resistance: 20mΩ max
- Insulation resistance: 1000MΩ min
- Dielection withstanding Voltage: 500V DC for 1 minute
- Rate voltage: 125V

Mechanical

- Mating force: 1.0 N Max./contact
- Unmating force: 0.6 N Min./contact
- Socket/Cable Termination Force: 19 N Min.
- Operating Temperature: -55°C to 105°C

Applications and Features

- Single beam contact.
- Form 10 to 80 position.
- Provide fast,easy assembly to flat cable AWG 30(PVC, FEP, TPE).
- Mates with 0.016(0.40)square or round pin on 0.05 X 0.10(2.54) centers.

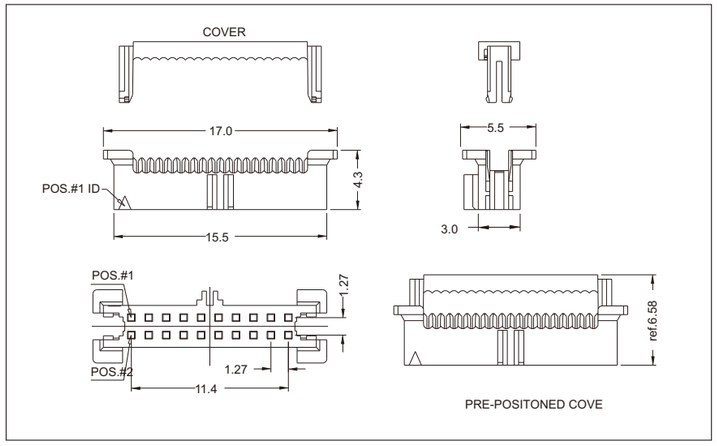

Notes: Please replace "X" with appropriate coding listed in the tables below

8 1 2 — 2 0 0 0 — 0 0 J C — 0 8 0

NO. of contacts

20Pin

Termination type

Code	Definition
0	IDC pierce

Relief type

Code	Definition
0	Two piece

Contact plating

Code	Definition	
	Termination	Contact
C	Ni plated	Au5u"
M	Ni plated	Au30u"

Insulator material

Code	Definition
0	PBT

Insulator Color

Code	Definition
1	Black
8	Grey

Mark

Code	Definition
0	No mark
1	Nextron

Note: Dimensions are shown in Millimeters .Dimensions are for reference only.

Tel: +86-755-2605-2427 Fax: +86-755-2642-6035 Email:sales@jhjm.cc Internet: http://www.jhjm.cc

nextron®

812 Series

IDC socket-with stamped and formed contacts
IDC Socket Connectors
For square post header 0.635mm/0.25"

Technical Data

Material

- Contact: Copper Alloy
- Insulator body: Glass filled polyester UL 94V-0
- Strain relief: Polyester UL 94V-0
- Cover: PBT and 30 Fiber reinforced UL 94V-0
- Plating: (Contact) 1.25um/ 50 u" nickel gold and tin plating see table below

Electrical

- Current rating: 0.75 Amp
- Contact resistance: 20mΩ max
- Insulation resistance: 1000MΩ min
- Dielection withstanding Voltage: 500V AC
- Rate voltage: 125V AC

Mechanical

- Mating force: 1.12 N Max./contact
- Unmating force: 0.33 N Min./contact
- Latch retention force: 130 N Min.
- Operating Temperature: -55°C to 105°C
- Mating cycle: ＞50 mating cycle

Applications and Features

- Single beam contact.
- Form 10 to 80 position.
- Provide fast,easy assembly to flat cable AWG 30.
- Mates with 0.016(0.40)square or round pin on 0.05 X 0.10(2.54) centers.

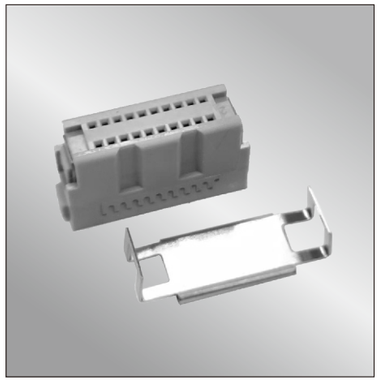

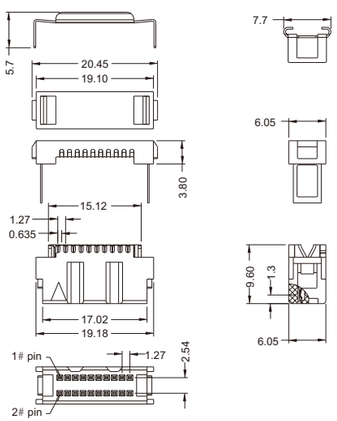

Notes: Please replace "X" with appropriate coding listed in the tables below

8 1 2 — 2 0 0 S — 0 0 8 M — 0 0 0

NO. of contacts

20 (exist)
Extens 26,36 40,50 60,68 80,100

Termination type

Code	Definition
0	IDC pierce

Relief type

Code	Definition
0	Two piece
S	Three pieces with reverse discount

Contact plating

Code	Definition	
	Termination	Contact
J	Tin plated	Au5u"
M	Tin plated	Au30u"

Insulator material

Code	Definition
0	PBT

Insulator Color

Code	Definition
1	Black
8	Grey

Mark

Code	Definition
0	No mark
1	Nextron

Note: Dimensions are shown in Millimeters .Dimensions are for reference only.

nextron®

Cable Series

Cable
IDC CABLE ASSEMBLY
Pitch:2.54mm/0.10"

Technical Data

Material

- Connector: IDC SocKet Connectors
- Cable: N/A

Electrical

- Current rating: 1.0Amps/Contact MAX
- Contact resistance: ≤5Ω /Contact
- Insulation resistance: ≥5MΩ
- Operating Voltage: 30V

Mechanical

- Mechanical life cycle: 100 Minimum
- Operating Temperature: -25°C to 85°C

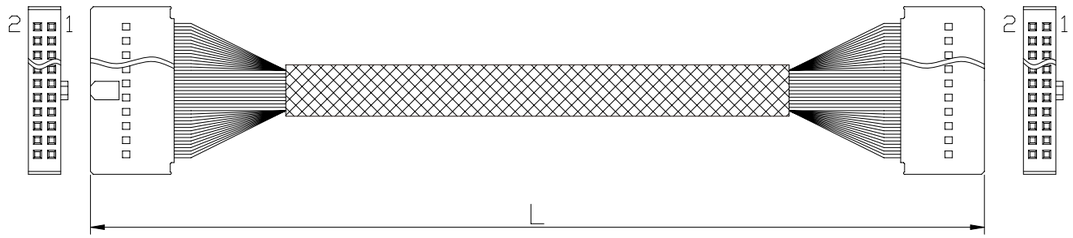

Notes: Please replace "X" with appropriate coding listed in the tables below

D C 6 — X X P X X — X X — L = X X X X X

No.of contacts

8-64

Cable

Code	Piece
X1	UL1007-24AWG
X2	UL1430-24AWG
X3	UL1569-24AWG
X4	SEYVP-100 26AWG

contact

Code	Piece
GY	灰色，镀锡
BK	黑色，镀锡
GG	灰色，AU5
BG	黑色，AU5

Length

50-9999mm

辅助材料

Code	
0	N/A
1	Tube
2	PET管
3	Tube+磁环
4	PET+磁环

流水号

Note: Dimensions are shown in Millimeters .Dimensions are for reference only.

Cable Series

Cable
FLAT CABLE ASSEMBLY
Pitch:1.27mm/0.05", 2.0mm/0.0785", 2.54mm/0.10"

Technical Data

Material
- Connector: IDC SocKet Connectors
- Cable: FLAT CABLE

Electrical
- Current rating: 0.3Amps/Contact MAX
- Contact resistance: ≤5Ω /Contact
- Insulation resistance: ≥5MΩ
- Operating Voltage: 30V

Mechanical
- Mechanical life cycle: 100 Minimum
- Operating Temperature: -25°C to 85°C

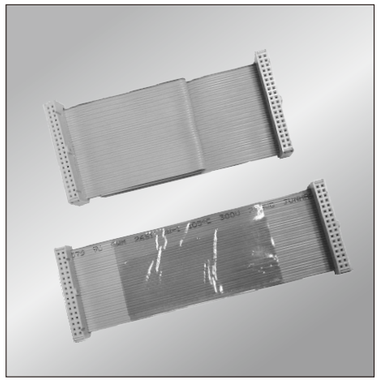

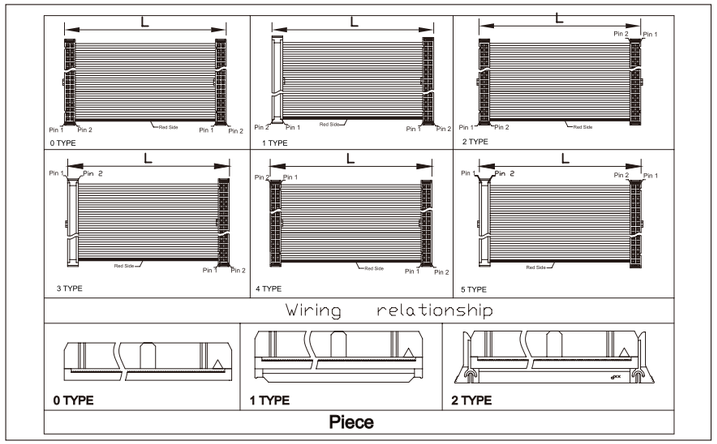

Notes: Please replace "X" with appropriate coding listed in the tables below

FCA — XXXX — XX — XXXX — XX

IDC spacing Pitch

Code	Pitch
0	1.27mm
1	2.00mm
2	2.54mm

No.of contacts: 8-64

Contact plated

Code	Plated
0	G/F/Ni
1	Au3U"/Ni
2	Au5U"/Ni

Piece

Code	Piece
0	two
1	three1
2	three2

Wiring relationship

Code	SEE table
0	
1	
2	
3	
4	
5	

Length: 40-9999mm

Insulator Color

Code	Definition
0	Grey
1	Black
2	P+Grey
3	P+Black

Serial number

Code	Definition
0	N/A
1	Tube
2	Magnetic ring
3	PI胶带
4	PET网管

Note: Dimensions are shown in Millimeters .Dimensions are for reference only.

nextron®
Tel: +86-755-2605-2427 Fax: +86-755-2642-6035 Email:sales@jhjm.cc Internet: http://www.jhjm.cc

SUB Series

Serial D-Sub Connector, Solder
Pitch:2.77mm/0.109"

Technical Data

Material
- Contact: BRASS/Bronze Phosphor
- Plating: (Contact) 1.25μm/ 50μ" nickel gold and tin plating see table below
- Board lock: BRASS
- Plating: (Board lock) 1.25um/ 50u" nickel Ni or tin plating
- Insulator body: Glass filled polyester UL 94V-0

Electrical
- Current rating: 3.0 Amp
- Contact resistance: 30MΩ max
- Insulation resistance: 1000MΩ min
- Dielection withstanding voltage: 1000VAC RMS

Mechanical
- Operating Temperature: -40°C to 105°C
- Mating cycle: ⩾500 mating cycle

Applications and Features
- Input / Output Connector.
- Available in 9, 15, 25 and 37 positions.
- Available in plugs and receptacles.
- Available molding Insulation with cable after soldering.
- Solder cup contacts.

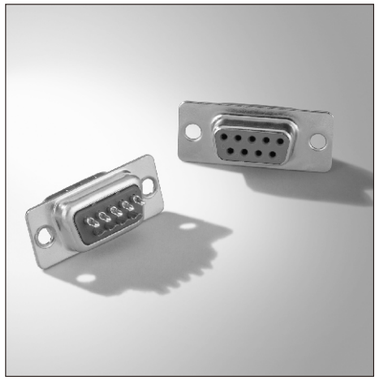

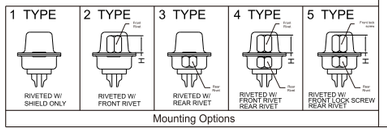

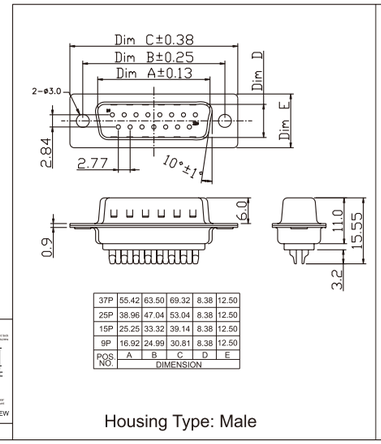

POS NO.	A	B	C	D	E
	DIMENSION				
37P	55.42	63.50	69.32	8.38	12.50
25P	38.96	47.04	53.04	8.38	12.50
15P	25.25	33.32	39.14	8.38	12.50
9P	16.92	24.99	30.81	8.38	12.50

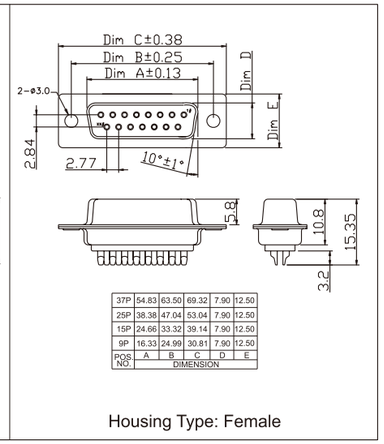

POS NO.	A	B	C	D	E
	DIMENSION				
37P	54.83	63.50	69.32	7.90	12.50
25P	38.38	47.04	53.04	7.90	12.50
15P	24.66	33.32	39.14	7.90	12.50
9P	16.33	24.99	30.81	7.90	12.50

Notes: Please replace "X" with appropriate coding listed in the tables below

SUB — DBXX — XXXX — XXX

No.of contacts

Code	Definition
A	9 PIN
B	15 PIN
C	25 PIN
E	37 PIN

Housing type

Code	Definition
M	Male
F	Female

Mounting options

Code	Definition
1	RIVETED W/ SHIELD ONLY
2	RIVETED W/ FRONT RIVET
3	RIVETED W/ REAR RIVET
4	RIVETED W/ FRONT RIVET REAR RIVET
5	RIVETED W/ FRONT LOCK SCREW REAR RIVET

Nut post height

Code	Definition
0	H=5.8mm
1	H=4.8mm

Contact material

Code	Definition
2	Brass
7	Phosphor bronze

Contact plated

Code	Contact Area
A	Gold 1u"/ Light Tin
B	Gold 3u"/ Light Tin
C	Gold 5u"/ Light Tin
D	Gold 10u"/ Light Tin
E	Gold 15u"/ Light Tin

Insulator material

Code	Definition
0	PBT
2	NYLON

Insulator color

Code	Definition
0	Black
5	Green
6	Blue
9	White

Mark

Code	Definition
0	No mark
2	Nextron mark

Note: Dimensions are shown in Millimeters .Dimensions are for reference only.

nextron®
Tel: +86-755-2605-2427 Fax: +86-755-2642-6035 Email:sales@jhjm.cc Internet: http://www.jhjm.cc

SUB Series

Serial D-Sub Connector, Standard Dip

Pitch:2.77mm/0.109"

Technical Data

Material

- Contact: BRASS/Bronze Phosphor
- Plating: (Contact) 1.25μm/ 50μ" nickel gold and tin plating see table below
- Board lock: BRASS
- Plating: (Board lock) 1.25um/ 50u" nickel Ni or tin plating
- Insulator body: Glass filled polyester UL 94V-0

Electrical

- Current rating: 3.0 Amp
- Contact resistance: 30MΩ max
- Insulation resistance: 1000MΩ min
- Dielection withstanding voltage: 1000VAC RMS

Mechanical

- Operating Temperature: -40°C to 105°C
- Mating cycle: ⩾500 mating cycle

Applications and Features

- Input / Output Connector.
- Available in 9, 15, 25 and 37 positions.
- Available in plugs and receptacles.
- Solder on P.C.B.

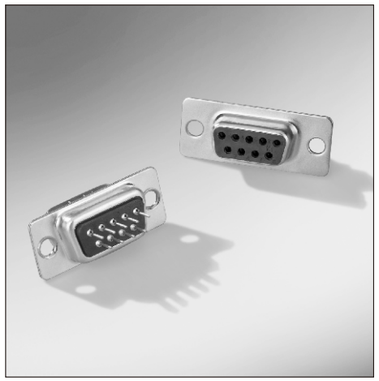

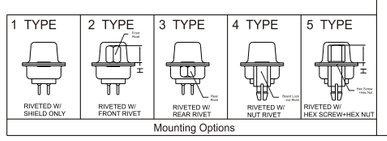

Mounting Options

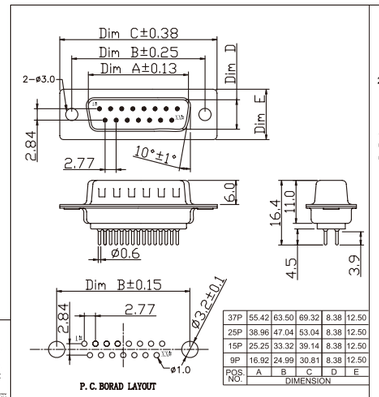

POS NO.	A	B	C	D	E
37P	55.42	63.50	69.32	8.38	12.50
25P	38.96	47.04	53.04	8.38	12.50
15P	25.25	33.32	39.14	8.38	12.50
9P	16.92	24.99	30.81	8.38	12.50

DIMENSION

Housing Type: Male

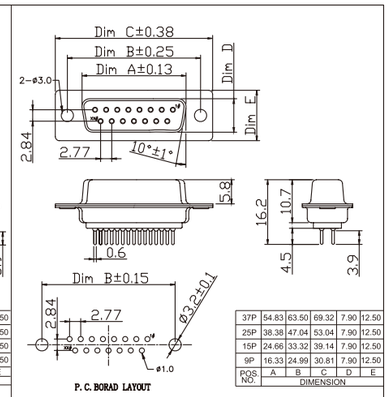

POS NO.	A	B	C	D	E
37P	54.83	63.50	69.32	7.90	12.50
25P	38.38	47.04	53.04	7.90	12.50
15P	24.66	33.32	39.14	7.90	12.50
9P	16.33	24.99	30.81	7.90	12.50

DIMENSION

Housing Type: Female

Notes: Please replace "X" with appropriate coding listed in the tables below

SUB — DPXX — XXXX — XXX

No.of contacts

Code	Definition
A	9 PIN
B	15 PIN
C	25 PIN
E	37 PIN

Housing type

Code	Definition
M	Male
F	Female

Mounting options

Code	Definition
1	RIVETED W/ SHIELD ONLY
2	RIVETED W/ FRONT RIVET
3	RIVETED W/ REAR RIVET
4	RIVETED W/ -NUT RIVET
5	RIVETED W/ HEX SCREW+HEX NUT

Nut post height

Code	Definition
0	H=5.8mm
1	H=4.8mm

Contact material

Code	Definition
2	Brass
7	Phosphor bronze

Contact plated

Code	Contact Area
1	Gold 1u"
2	Gold 3u"
3	Gold 5u"
4	Gold 10u"
5	Gold 15u"
6	Gold 30u"

Insulator material

Code	Definition
0	PBT
2	NYLON

Insulator color

Code	Definition
0	Black
6	Blue
9	White

Mark

Code	Definition
0	No mark
2	Nextron mark

Note: Dimensions are shown in Millimeters .Dimensions are for reference only.

Tel: +86-755-2605-2427 Fax: +86-755-2642-6035 Email:sales@jhjm.cc Internet: http://www.jhjm.cc

SUB Series

Serial D-Sub Connector,Right Angle

Pitch:2.77mm/0.109"

Technical Data

Material

- Contact: BRASS/Bronze Phosphor
- Plating: (Contact) 1.25μm/ 50μ" nickel gold and tin plating see table below
- Board lock: BRASS
- Plating: (Board lock) 1.25um/ 50u" nickel Ni or tin plating
- Insulator body: Glass filled polyester UL 94V-0

Electrical

- Current rating: 3.0 Amp
- Contact resistance: 30MΩ max
- Insulation resistance: 1000MΩ min
- Dielection withstanding voltage: 1000VAC RMS

Mechanical

- Operating Temperature: -40°C to 105°C
- Mating cycle: ⩾500 mating cycle

Applications and Features

- Input / Output Connector.
- Available in 9, 15, 25 and 37 positions.
- Available in plugs and receptacles.
- Available hold firm with screw to plug/receptacle.
- Solder on P.C.B.

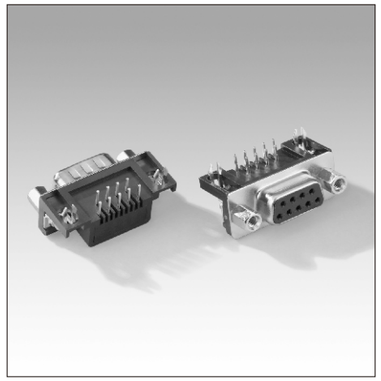

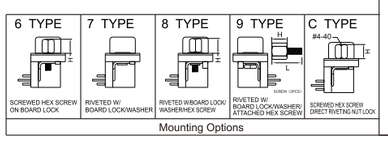

Mounting Options

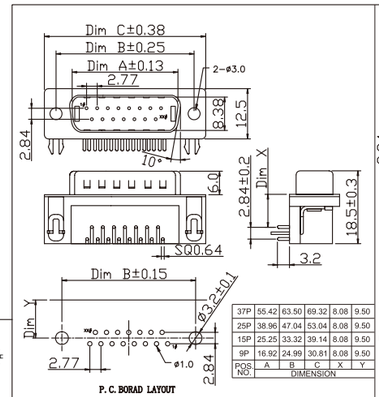

POS NO.	A	B	C	X	Y
37P	55.42	63.50	69.32	8.08	9.50
25P	38.96	47.04	53.04	8.08	9.50
15P	25.25	33.32	39.14	8.08	9.50
9P	16.92	24.99	30.81	8.08	9.50

DIMENSION

Housing Type: Male

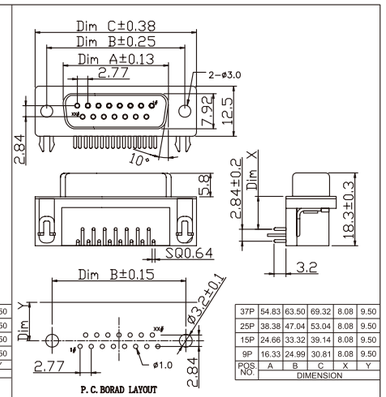

POS NO.	A	B	C	X	Y
37P	54.83	63.50	69.32	8.08	9.50
25P	38.38	47.04	53.04	8.08	9.50
15P	24.66	33.32	39.14	8.08	9.50
9P	16.33	24.99	30.81	8.08	9.50

DIMENSION

Housing Type: Female

Notes: Please replace "X" with appropriate coding listed in the tables below

SUB — DRXX — XXXX — XXX

No.of contacts

Code	Definition
A	9 PIN
B	15 PIN
C	25 PIN
E	37 PIN

Housing type

Code	Definition
M	Male
F	Female

Mounting options

Code	Definition
6	SCREWED HEX SCREW ON BOARD LOCK
7	RIVETED W/ BOARD LOCK/WASHER
8	RIVETED W/BOARD LOCK/ WASHER/HEX SCREW
9	RIVETED W/ BOARD LOCK/WASHER/ ATTACHED HEX SCREW
C	SCREWED HEX SCREW DIRECT RIVETED NUT LOCK

Nut post height

Code	Definition
0	H=5.8mm
1	H=4.8mm

Contact material

Code	Definition
2	Brass
7	Phosphor bronze

Contact plated

Code	Contact Area
A	Gold 1u"/ Light Tin
B	Gold 3u"/ Light Tin
C	Gold 5u"/ Light Tin
D	Gold 10u"/ Light Tin
E	Gold 15u"/ Light Tin

Insulator material

Code	Definition
0	PBT
2	NYLON

Insulator color

Code	Definition
0	Black
6	Blue
9	White

Mark

Code	Definition
0	No mark
2	Nextron mark

Note: Dimensions are shown in Millimeters .Dimensions are for reference only.

Tel: +86-755-2605-2427 Fax: +86-755-2642-6035 Email:sales@jhjm.cc Internet: http://www.jhjm.cc

SUB Series

Serial D-Sub Connector, IDC Type

Pitch:2.77mm/0.109"

Technical Data

Material

- Contact: BRASS/Bronze Phosphor
- Plating: (Contact) 1.25μm/ 50μ" nickel gold and tin plating see table below
- Board lock: BRASS
- Plating: (Board lock) 1.25um/ 50u" nickel Ni or tin plating
- Insulator body: Glass filled polyester UL 94V-0

Electrical

- Current rating: 3.0 Amp
- Contact resistance: 30MΩ max
- Insulation resistance: 1000MΩ min
- Dielection withstanding voltage: 1000VAC RMS

Mechanical

- Operating Temperature: -40°C to 105°C
- Mating cycle: ≥500 mating cycle

Applications and Features

- Input / Output Connector.
- Available in 9, 15, 25 and 37 positions.
- Available in plugs and receptacles.
- Easy fit with cable without soldering.
- Easy application without special application tools.

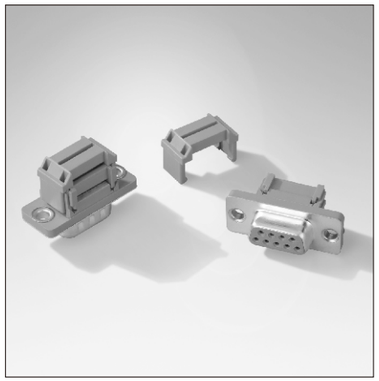

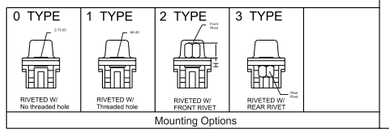

Mounting Options

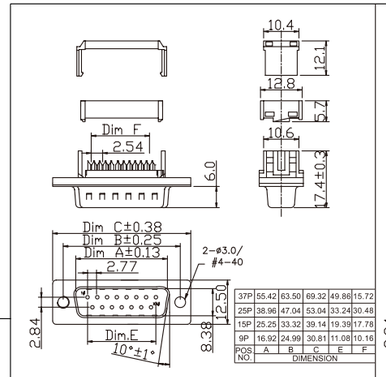

37P	55.42	63.50	69.32	49.86	15.72	
25P	38.96	47.04	53.04	33.24	30.48	
15P	25.25	33.32	39.14	19.39	17.78	
9P	16.92	24.99	30.81	11.08	10.16	
POS. NO.	A	B	C	E	F	DIMENSION

Housing Type: Male

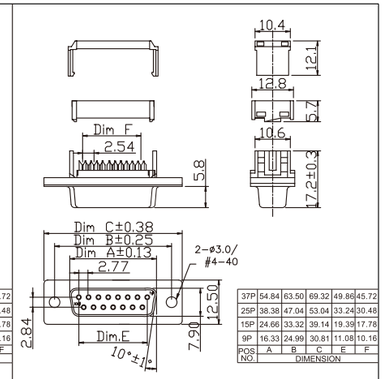

37P	54.84	63.50	69.32	49.86	45.72	
25P	38.38	47.04	53.04	33.24	30.48	
15P	24.66	33.32	39.14	19.39	17.78	
9P	16.33	24.99	30.81	11.08	10.16	
POS. NO.	A	B	C	E	F	DIMENSION

Housing Type: Female

Notes: Please replace "X" with appropriate coding listed in the tables below

SUB — DCXX — XXXX — XXX

No.of contacts

Code	Definition
A	9 PIN
B	15 PIN
C	25 PIN
E	37 PIN

Housing type

Code	Definition
M	Male
F	Female

Mounting options

Code	Definition
0	RIVETED W/ NO THREADED HOLE
1	RIVETED W/ SHIELD ONLY
2	RIVETED W/ FRONT RIVET
3	RIVETED W/ REAR RIVET

Nut post height

Code	Definition
0	H=5.8mm
1	H=4.8mm

Contact material

Code	Definition
2	Brass
7	Phosphor bronze

Contact plated

Code	Contact Area
A	Gold 1u"/ Light Tin
B	Gold 3u"/ Light Tin
C	Gold 5u"/ Light Tin
D	Gold 10u"/ Light Tin
E	Gold 15u"/ Light Tin

Insulator material

Code	Definition
0	PBT
2	NYLON

Insulator color

Code	Definition
0	Black
6	Blue
9	White

Mark

Code	Definition
0	No mark
2	Nextron mark

Note: Dimensions are shown in Millimeters .Dimensions are for reference only.

nextron®

Tel: +86-755-2605-2427 Fax: +86-755-2642-6035 Email:sales@jhjm.cc Internet: http://www.jhjm.cc

D-SUB Series

Serial High density D-Sub Connector, Solder

Pitch:2.29mm/0.09",2.41mm/0.095"

Technical Data

Material

- Contact: BRASS/Bronze Phosphor
- Plating: (Contact) 1.25um/ 50 u" nickel gold and tin plating see table below
- Boardlock: BRASS
- Plating: (Boardlock) 1.25um/ 50 u" nickel Ni or tin plating
- Insulator body: Glass filled polyester UL 94V-0

Electrical

- Current rating: 3.0Amp
- Contact resistance: 30mΩ max
- Insulation resistance: 1000MΩ min
- Dielection Withstanding Voltage: 1000VAC RMS

Mechanical

- Operating Temperature: -40°C to 105°C
- Mating cycle: ≥500 mating cycle

Applications and Features

- Input / Output Connector
- Available in 15, 26,44,62 and 78 positions
- Available in plugs and receptacles
- Available molding insulation with cable
- after soldering
- Solder cup contacts

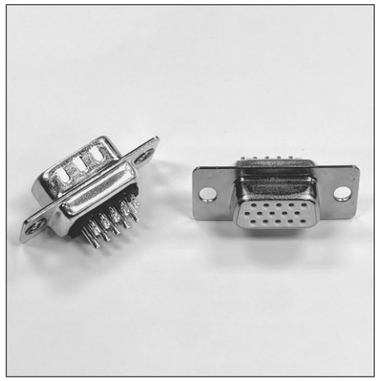

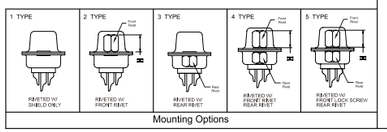

Mounting Options

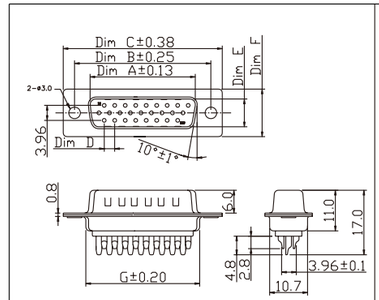

78P	52.86	61.10	67.10	2.41	11.11	15.30	55.00
62P	55.42	63.50	69.32	2.41	8.36	12.50	57.30
44P	38.96	47.04	53.04	2.29	8.36	12.50	41.10
26P	25.25	33.32	39.14	2.29	8.36	12.50	27.70
15P	16.92	24.99	30.81	2.29	8.36	12.50	19.30
POS. NO.	A	B	C	D	E	F	G

DIMENSION

Housing Type: Male

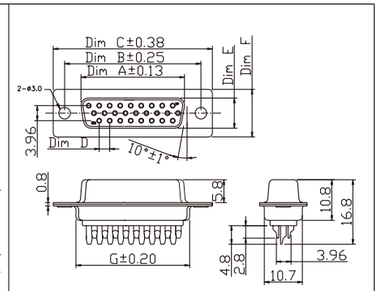

78P	52.23	61.10	67.10	2.41	10.80	15.30	55.00
62P	54.84	63.50	69.32	2.41	7.92	12.50	57.30
44P	38.38	47.04	53.04	2.29	7.92	12.50	41.10
26P	24.66	33.32	39.14	2.29	7.92	12.50	27.70
15P	16.33	24.99	30.81	2.29	7.92	12.50	19.30
POS. NO.	A	B	C	D	E	F	G

DIMENSION

Housing Type: Female

Notes: Please replace "X" with appropriate coding listed in the tables below

SUB — HBXX — XXXX — XXX

Number of contacts

Code	Definition
B	15 PIN
D	26 PIN
F	44 PIN
G	62 PIN
H	78 PIN

Housing Type

Code	Definition
M	Male
F	Female

Mounting Options

Code	Definition
1	RIVETED W/ SHIELD ONLY
2	RIVETED W/ FRONT RIVET
3	RIVETED W/ REAR RIVET
4	RIVETED W/ FRONT RIVET REAR RIVET
5	RIVETED W/ FRONT LOCK SCREW REAR RIVET

Nut post height

Code	Definition
0	H=5.8mm
1	H=4.8mm

Contacts material

Code	Definition
2	Brass
7	Phosphor bronze

Contact Plated

Code	Contact Area
A	Gold 1u"/ Light Tin
B	Gold 3u"/ Light Tin
C	Gold 5u"/ Light Tin
D	Gold 10u"/ Light Tin
E	Gold 15u"/ Light Tin

Insulator material

Code	Definition
0	PBT
2	NYLON

Insulator color

Code	Definition
0	Black
5	Green
6	Blue
9	White

Mark

Code	Definition
0	No mark
2	Nextron mark

Note: Dimensions are shown in Millimeters .Dimensions are for reference only.

nextron®

Tel: +86-755-2605-2427 Fax: +86-755-2642-6035 Email:sales@jhjm.cc Internet: http://www.jhjm.cc

D-SUB Series

Serial High density D-Sub Connector, Standard Dip

Pitch:2.29mm/0.09",2.41mm/0.095"

Technical Data

Material

- Contact: BRASS/Bronze Phosphor
- Plating: (Contact) 1.25um/ 50 u" nickel gold and tin plating see table below
- Boardlock: BRASS
- Plating: (Boardlock) 1.25um/ 50 u" nickel Ni or tin plating
- Insulator body: Glass filled polyester UL 94V-0

Electrical

- Current rating: 3.0Amp
- Contact resistance: 30mΩ max
- Insulation resistance: 1000MΩ min
- Dielection Withstanding Voltage: 1000VAC RMS

Mechanical

- Operating Temperature: -40°C to 105°C
- Mating cycle: ≥500 mating cycle

Applications and Features

- Input / Output Connector
- Available in 15, 26,44,62 and 78 positions
- Available in plugs and receptacles
- Solder on P.C.B.

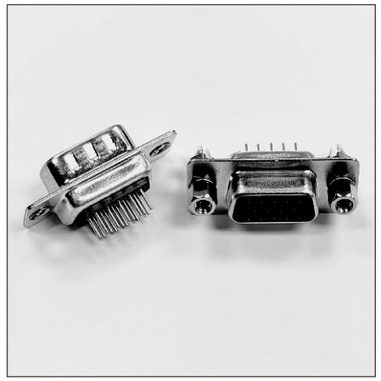

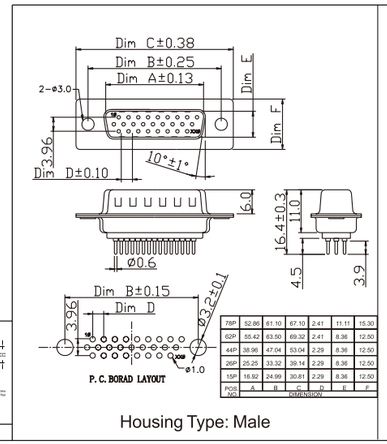

POS NO	A	B	C	D	E	F
78P	52.86	61.10	67.10	2.41	11.11	15.30
62P	55.42	63.50	69.32	2.41	8.36	12.50
44P	38.98	47.04	53.04	2.29	8.36	12.50
26P	25.25	33.32	39.14	2.29	8.36	12.50
15P	16.92	24.99	30.81	2.29	8.36	12.50

DIMENSION

Housing Type: Male

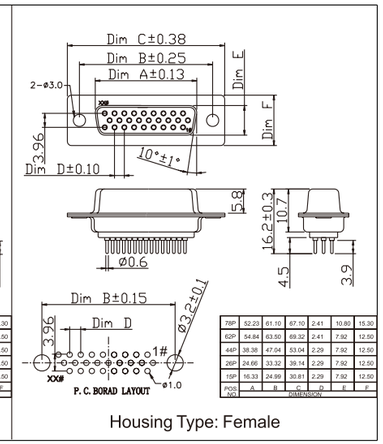

POS NO	A	B	C	D	E	F
78P	52.23	61.10	67.10	2.41	10.89	15.30
62P	54.84	63.50	69.32	2.41	7.92	12.50
44P	38.38	47.04	53.04	2.29	7.92	12.50
26P	24.66	33.32	39.14	2.29	7.92	12.50
15P	16.33	24.99	30.81	2.29	7.92	12.50

DIMENSION

Housing Type: Female

Notes: Please replace "X" with appropriate coding listed in the tables below

SUB — HPXX — XXXX — XXX

Number of contacts / Housing Type / Mounting Options / Nut post height / Contacts material / Contact Plated / Insulator material / Insulator color / Mark

Code	Definition	Code	Definition	Code	Definition	Code	Definition	Code	Definition	Code	Contact Area	Code	Definition	Code	Definition	Code	Definition
B	15 PIN	M	Male	1	RIVETED W/ SHIELD ONLY	0	H=5.8mm	2	Brass	1	Gold 1u"	0	PBT	0	Black	0	No mark
D	26 PIN	F	Female	2	RIVETED W/ FRONT RIVET	1	H=4.8mm	7	Phosphor bronze	2	Gold 3u"	2	NYLON	6	Blue	2	Nextron mark
F	44 PIN			3	RIVETED W/ REAR RIVET					3	Gold 5u"			9	White		
G	62 PIN			4	RIVETED W/ -NUT RIVET					4	Gold 10u"						
H	78 PIN			5	RIVETED W/ HEX SCREW+HEX NUT					5	Gold 15u"						
										6	Gold 30u"						

Note: Dimensions are shown in Millimeters .Dimensions are for reference only.

nextron®

Tel: +86-755-2605-2427 Fax: +86-755-2642-6035 Email:sales@jhjm.cc Internet: http://www.jhjm.cc

D-SUB Series

Serial High density D-Sub Connector, Right Angle

Pitch:2.29mm/0.09",2.41mm/0.095"

Technical Data

Material

- Contact: BRASS/Bronze Phosphor
- Plating: (Contact) 1.25um/ 50 u" nickel gold and tin plating see table below
- Boardlock: BRASS
- Plating: (Boardlock) 1.25um/ 50 u" nickel Ni or tin plating
- Insulator body: Glass filled polyester UL 94V-0

Electrical

- Current rating: 3.0Amp
- Contact resistance: 30mΩ max
- Insulation resistance: 1000MΩ min
- Dielection Withstanding Voltage: 1000VAC RMS

Mechanical

- Operating Temperature: -40°C to 105°C
- Mating cycle: ≥500 mating cycle

Applications and Features

- Input / Output Connector
- Available in 15, 26,44,62 and 78 positions
- Available in plugs and receptacles
- Available hold firm with screw to plug/ receptacle
- Solder on P.C.B.

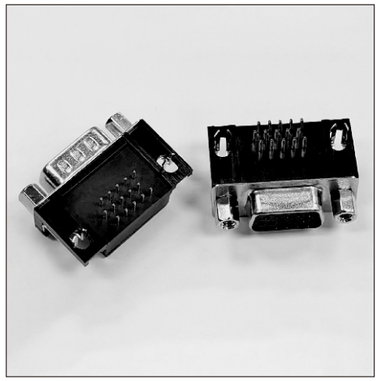

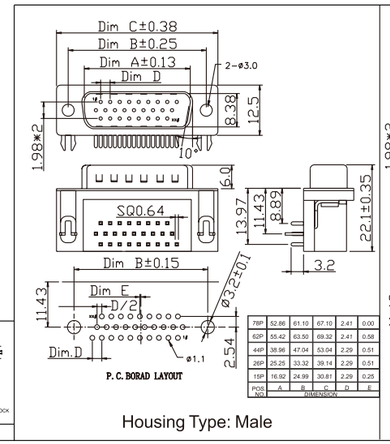

POS NO	A	B	C	D	E
78P	52.86	61.10	67.10	2.41	0.00
62P	55.42	63.50	69.32	2.41	0.58
44P	38.98	47.04	53.04	2.29	0.51
26P	25.25	33.32	39.14	2.29	0.51
15P	16.92	24.99	30.81	2.29	0.25

DIMENSION

Housing Type: Male

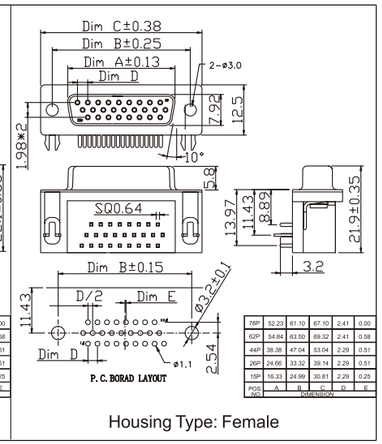

POS NO	A	B	C	D	E
78P	52.23	61.10	67.10	2.41	0.00
62P	54.84	63.50	69.32	2.41	0.58
44P	38.38	47.04	53.04	2.29	0.51
26P	24.66	33.32	39.14	2.29	0.51
15P	16.33	24.99	30.81	2.29	0.25

DIMENSION

Housing Type: Female

Notes: Please replace "X" with appropriate coding listed in the tables below

SUB — HRXX — XXXX — XXX

Number of contacts / Housing Type / Mounting Options / Nut post height / Contacts material / Contact Plated / Insulator material / Insulator color / Mark

Code	Definition	Code	Definition	Code	Definition	Code	Definition	Code	Definition	Code	Contact Area	Code	Definition	Code	Definition	Code	Definition
B	15 PIN	M	Male	6	SCREWED HEX SCREW ON BOARD LOCK	0	H=5.8mm	2	Brass	A	Gold 1u"/ Light Tin	0	PBT	0	Black	0	No mark
D	26 PIN	F	Female	7	RIVETED W/ BOARD LOCK/WASHER	1	H=4.8mm	7	Phosphor bronze	B	Gold 3u"/ Light Tin	2	NYLON	6	Blue	2	Nextron mark
F	44 PIN			8	RIVETED W/BOARD LOCK/ WASHER/HEX SCREW					C	Gold 5u"/ Light Tin			9	White		
G	62 PIN			9	RIVETED W/ BOARD LOCK/WASHER/ ATTACHED HEX SCREW					D	Gold 10u"/ Light Tin						
H	78 PIN			C	SCREWED HEX SCREW DIRECT RIVETED NUT LOCK					E	Gold 15u"/ Light Tin						

Note: Dimensions are shown in Millimeters .Dimensions are for reference only.

nextron®

Tel: +86-755-2605-2427 Fax: +86-755-2642-6035 Email:sales@jhjm.cc Internet: http://www.jhjm.cc

D-SUB Series

Serial D-Sub Connector, Solder(DB-Machine Pin)

Pitch: 2.77mm/0.109"

Technical Data

Material

- Contact: Copper Alloy
- Plating: (Contact) 1.25um/ 50 u" nickel gold and tin plating see table below
- Boardlock: BRASS
- Plating: (Boardlock) 1.25um/ 50 u" nickel Ni or tin plating
- Insulator body: Glass filled polyester UL 94V-0

Electrical

- Current rating: 5.0Amp
- Contact resistance: 30mΩ max
- Insulation resistance: 5000MΩ min
- Dielection Withstanding Voltage: 1000VAC RMS

Mechanical

- Operating Temperature: -40°C to 105°C
- Mating cycle: ⩾500 mating cycle

Applications and Features

- Input / Output Connector
- Available in 9, 15, 25 and 37 positions
- Available in plugs and receptacles
- Available molding Insulation with cable after soldering
- Solder cup contacts

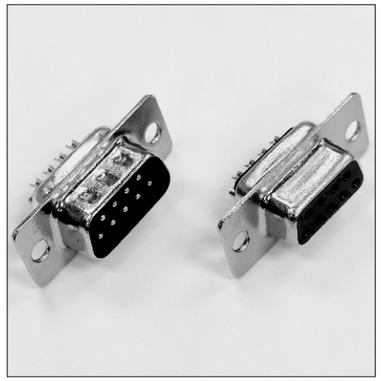

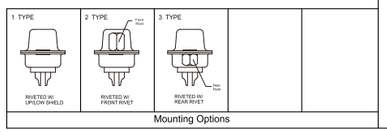

Mounting Options

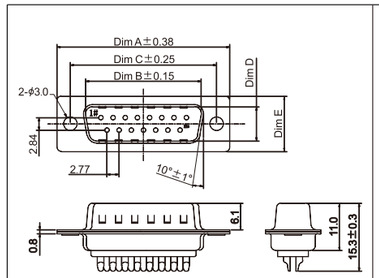

37P	69.40	55.42	63.50	8.30	12.50
25P	53.03	38.96	47.04	8.30	12.50
15P	39.20	25.25	33.30	8.30	12.50
9P	30.80	17.00	25.00	8.30	12.50
POS. NO.	A	B	C	D	E
	DIMENSION				

Housing Type: Male

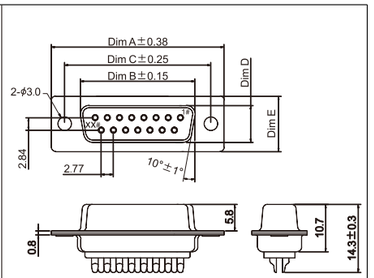

37P	69.40	54.80	63.50	7.90	12.50
25P	53.03	38.40	47.04	7.90	12.50
15P	39.20	24.70	33.30	7.90	12.50
9P	30.80	16.30	25.00	7.90	12.50
POS. NO.	A	B	C	D	E
	DIMENSION				

Housing Type: Female

Notes: Please replace "X" with appropriate coding listed in the tables below

S U B — X X S X — 1 X X — X X X — X

Number of contacts

Code	Definition
09	9 PIN
15	15 PIN
25	25 PIN
37	37 PIN

Housing Type

Code	Definition
0	None
P	Male
S	Female

Iron shell Plated

Code	Definition
1	Tin plating on nickel
2	Nickel plating
3	Yellow zine plating

Terminal Plated

Code	Definition
1	Gold 3u"
2	Gold 15u"
3	Gold 30u"

Insulator material

Code	Definition
1	PBT
2	HTN

Insulator color

Code	Definition
1	Black
3	White
4	Green

Mark

Code	Definition
0	No mark
1	Nextron mark

Attachment form

Code	Definition
1	None(light hole)
3	Rear riveting
5	Front riveting

Note: Dimensions are shown in Millimeters .Dimensions are for reference only.

nextron®

Tel: +86-755-2605-2427 Fax: +86-755-2642-6035 Email:sales@jhjm.cc Internet: http://www.jhjm.cc

D-SUB Series

Serial D-Sub Connector, Standard Dip(DP-Machine Pin)

Pitch:2.77mm/0.109"

Technical Data

Material

- Contact: Copper Alloy
- Plating: (Contact) 1.25um/ 50 u" nickel gold and tin plating see table below
- Boardlock: BRASS
- Plating: (Boardlock) 1.25um/ 50 u" nickel Ni or tin plating
- Insulator body: Glass filled polyester UL 94V-0

Electrical

- Current rating: 5.0Amp
- Contact resistance: 30mΩ max
- Insulation resistance: 5000MΩ min
- Dielection Withstanding Voltage: 1000VAC RMS

Mechanical

- Operating Temperature: -40°C to 105°C
- Mating cycle: ⩾500 mating cycle

Applications and Features

- Input / Output Connector
- Available in 9, 15, 25 and 37 positions
- Available in plugs and receptacles
- Solder on P.C.B.

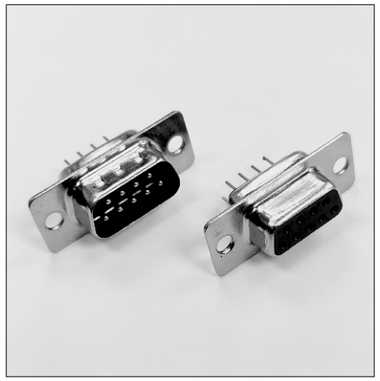

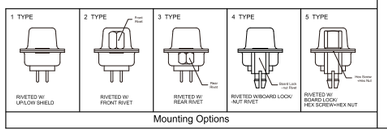

Mounting Options

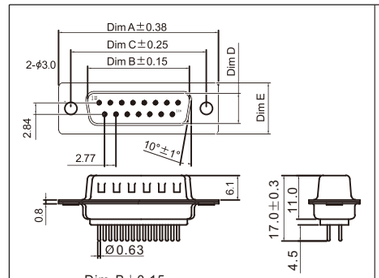

37P	69.40	55.42	63.50	8.30	12.50
25P	53.03	38.96	47.04	8.30	12.50
15P	39.20	25.25	33.30	8.30	12.50
9P	30.80	17.00	25.00	8.30	12.50
POS. NO.	A	B	C	D	E
	DIMENSION				

Housing Type: Male

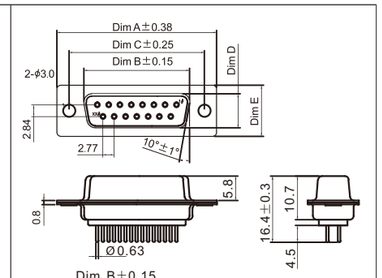

37P	69.40	54.80	63.50	7.90	12.50
25P	53.03	38.40	47.04	7.90	12.50
15P	39.20	24.70	33.30	7.90	12.50
9P	30.80	16.30	25.00	7.90	12.50
POS. NO.	A	B	C	D	E
	DIMENSION				

Housing Type: Female

Notes: Please replace "X" with appropriate coding listed in the tables below

S U B — X X S X — 2 X X — X X X — X

Number of contacts

Code	Definition
09	9 PIN
15	15 PIN
25	25 PIN
37	37 PIN

Housing Type

Code	Definition
0	None
P	Male
S	Female

Iron shell Plated

Code	Definition
1	Tin plating on nickel
2	Nickel plating
3	Yellow zine plating

Terminal Plated

Code	Definition
1	Gold 3u"
2	Gold 15u"
3	Gold 30u"

Insulator material

Code	Definition
1	PBT
2	HTN

Insulator color

Code	Definition
1	Black
3	White
4	Green

Mark

Code	Definition
0	No mark
1	Nextron mark

Attachment form

Code	Definition
1	None(light hole)
3	Rear riveting
5	Front riveting

Note: Dimensions are shown in Millimeters .Dimensions are for reference only.

nextron®

Tel: +86-755-2605-2427 Fax: +86-755-2642-6035 Email:sales@jhjm.cc Internet: http://www.jhjm.cc

D-SUB Series

Serial D-Sub Connector, Standard Right Angle(DR-Machine Pin)

Pitch:2.77mm/0.109"

Technical Data

Material

- Contact: Copper Alloy
- Plating: (Contact) 1.25um/ 50 u" nickel gold and tin plating see table below
- Boardlock: BRASS
- Plating: (Boardlock) 1.25um/ 50 u" nickel Ni or tin plating
- Insulator body: Glass filled polyester UL 94V-0

Electrical

- Current rating: 5.0Amp
- Contact resistance: 30mΩ max
- Insulation resistance: 5000MΩ min
- Dielection Withstanding Voltage: 1000VAC RMS

Mechanical

- Operating Temperature: -40°C to 105°C
- Mating cycle: ⩾500 mating cycle

Applications and Features

- Input / Output Connector
- Available in 9, 15, 25 and 37 positions
- Available in plugs and receptacles
- Available hold firm with screw to plug/ receptacle
- Solder on P.C.B.

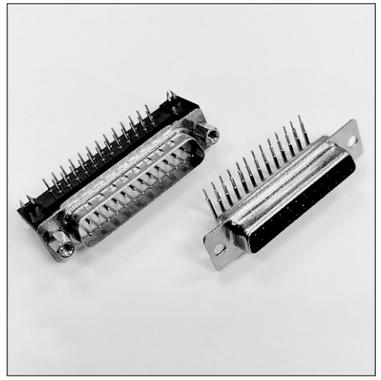

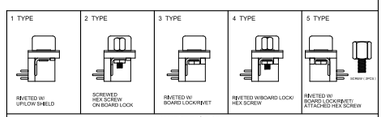

Mounting Options

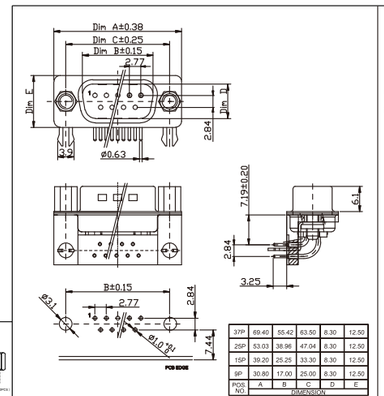

POS. NO.	A	B	C	D	E
	DIMENSION				
37P	69.40	55.42	63.50	8.30	12.50
25P	53.03	38.96	47.04	8.30	12.50
15P	39.20	25.25	33.30	8.30	12.50
9P	30.80	17.00	25.00	8.30	12.50

Housing Type: Male

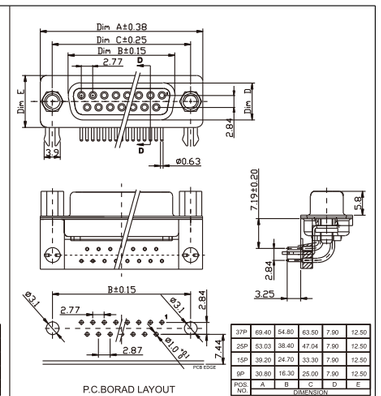

P.C.BORAD LAYOUT

POS. NO.	A	B	C	D	E
	DIMENSION				
37P	69.40	54.80	63.50	7.90	12.50
25P	53.03	38.40	47.04	7.90	12.50
15P	39.20	24.70	33.30	7.90	12.50
9P	30.80	16.30	25.00	7.90	12.50

Housing Type: Female

Notes: Please replace "X" with appropriate coding listed in the tables below

S U B — X X S X — 3 X X — X X X — X

Number of contacts

Code	Definition
09	9 PIN
15	15 PIN
25	25 PIN
37	37 PIN

Housing Type

Code	Definition
0	None
P	Male
S	Female

Iron shell Plated

Code	Definition
1	Tin plating on nickel
2	Nickel plating
3	Yellow zine plating

Terminal Plated

Code	Definition
1	Gold 3u"
2	Gold 15u"
3	Gold 30u"

Insulator material

Code	Definition
1	PBT
2	HTN

Insulator color

Code	Definition
1	Black
3	White
4	Green

Mark

Code	Definition
0	No mark
1	Nextron mark

Attachment form

Code	Definition
1	None(light hole)
3	Rear riveting
5	Front riveting
C	Bracket+Harpoon +Screw nut

Note: Dimensions are shown in Millimeters .Dimensions are for reference only.

nextron®

Tel: +86-755-2605-2427 Fax: +86-755-2642-6035 Email:sales@jhjm.cc Internet: http://www.jhjm.cc

D-SUB Series

Serial D-Sub Connector, Solder(HDB-Machine Pin)

Pitch:2.29mm/0.0902"

Technical Data

Material

- Contact: Copper Alloy
- Plating: (Contact) 1.25um/ 50 u" nickel gold and tin plating see table below
- Boardlock: BRASS
- Plating: (Boardlock) 1.25um/ 50 u" nickel Ni or tin plating
- Insulator body: Glass filled polyester UL 94V-0

Electrical

- Current rating: 3.0Amp
- Contact resistance: 30mΩ max
- Insulation resistance: 5000MΩ min
- Dielection Withstanding Voltage: 1000VAC RMS

Mechanical

- Operating Temperature: -40°C to 105°C
- Mating cycle: ⩾500 mating cycle

Applications and Features

- Input / Output Connector
- Available in 15, 26, 44 and 62 positions
- Available in plugs and receptacles
- Available molding Insulation with cable after soldering
- Solder cup contacts

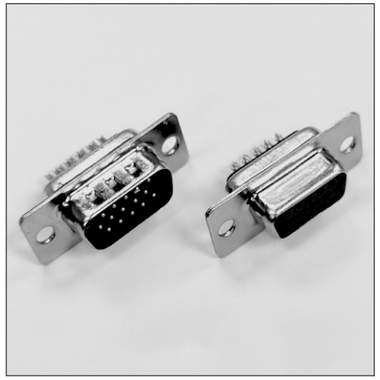

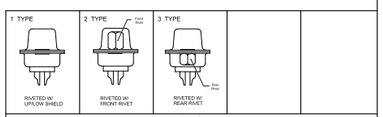

Mounting Options

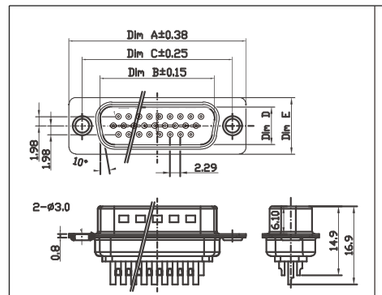

POS. NO.	A	B	C	D	E
	DIMENSION				
62P	69.40	55.42	63.50	8.30	12.50
44P	53.03	38.96	47.04	8.30	12.50
26P	39.20	25.25	33.30	8.30	12.50
15P	30.80	17.00	25.00	8.30	12.50

Housing Type: Male

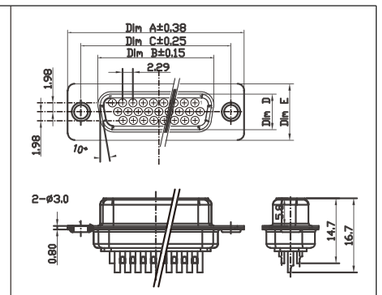

POS. NO.	A	B	C	D	E
	DIMENSION				
62P	69.40	54.80	63.50	7.90	12.50
44P	53.03	38.40	47.04	7.90	12.50
26P	39.20	24.70	33.30	7.90	12.50
15P	30.80	16.30	25.00	7.90	12.50

Housing Type: Female

Notes: Please replace "X" with appropriate coding listed in the tables below

S U B — X X H X — 1 X X — X X X — X

Number of contacts

Code	Definition
15	15 PIN
26	26 PIN
44	44 PIN
62	62 PIN

Housing Type

Code	Definition
0	None
P	Male
S	Female

Iron shell Plated

Code	Definition
1	Tin plating on nickel
2	Nickel plating
3	Yellow zine plating

Terminal Plated

Code	Definition
1	Gold 3u"
2	Gold 15u"
3	Gold 30u"

Insulator material

Code	Definition
1	PBT
2	HTN

Insulator color

Code	Definition
1	Black
3	White
4	Green

Mark

Code	Definition
0	No mark
1	Nextron mark

Attachment form

Code	Definition
1	None(light hole)
3	Rear riveting
5	Front riveting

Note: Dimensions are shown in Millimeters .Dimensions are for reference only.

nextron®

Tel: +86-755-2605-2427 Fax: +86-755-2642-6035 Email:sales@jhjm.cc Internet: http://www.jhjm.cc

D-SUB Series

Serial D-Sub Connector, Standard Dip(HDP-Machine Pin)

Pitch:2.29mm/0.0902"

Technical Data

Material

- Contact: Copper Alloy
- Plating: (Contact) 1.25um/ 50 u" nickel gold and tin plating see table below
- Boardlock: BRASS
- Plating: (Boardlock) 1.25um/ 50 u" nickel Ni or tin plating
- Insulator body: Glass filled polyester UL 94V-0

Electrical

- Current rating: 3.0Amp
- Contact resistance: 30mΩ max
- Insulation resistance: 5000MΩ min
- Dielection Withstanding Voltage: 1000VAC RMS

Mechanical

- Operating Temperature: -40°C to 105°C
- Mating cycle: ⩾500 mating cycle

Applications and Features

- Input / Output Connector
- Available in 9, 15, 25 and 37 positions
- Available in plugs and receptacles
- Solder on P.C.B.

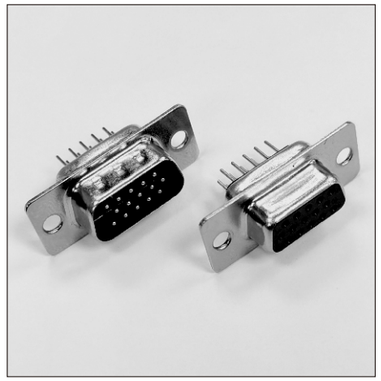

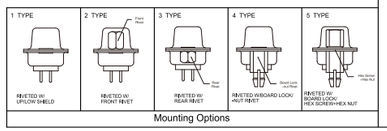

Mounting Options

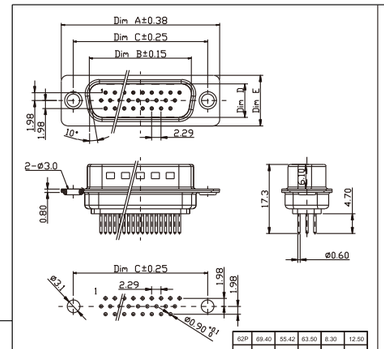

P.C.BORAD LAYOUT

62P	69.40	55.42	63.50	8.30	12.50
44P	53.03	38.96	47.04	8.30	12.50
26P	39.20	25.25	33.30	8.30	12.50
15P	30.80	17.00	25.00	8.30	12.50
POS NO.	A	B	C	D	E
	DIMENSION				

Housing Type: Male

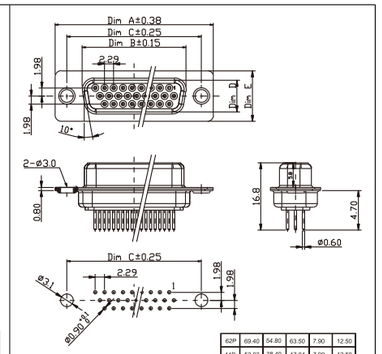

P.C.BORAD LAYOUT

62P	69.40	54.80	63.50	7.90	12.50
44P	53.03	38.40	47.04	7.90	12.50
26P	39.20	24.70	33.30	7.90	12.50
15P	30.80	16.30	25.00	7.90	12.50
POS NO.	A	B	C	D	E
	DIMENSION				

Housing Type: Female

Notes: Please replace "X" with appropriate coding listed in the tables below

S U B — X X H X — 2 X X — X X X — X

Number of contacts

Code	Definition
15	15 PIN
26	26 PIN
44	44 PIN
62	62 PIN

Housing Type

Code	Definition
0	None
P	Male
S	Female

Iron shell Plated

Code	Definition
1	Tin plating on nickel
2	Nickel plating
3	Yellow zine plating

Terminal Plated

Code	Definition
1	Gold 3u"
2	Gold 15u"
3	Gold 30u"

Insulator material

Code	Definition
1	PBT
2	HTN

Insulator color

Code	Definition
1	Black
3	White
4	Green

Mark

Code	Definition
0	No mark
1	Nextron mark

Attachment form

Code	Definition
1	None(light hole)
3	Rear riveting
5	Front riveting

Note: Dimensions are shown in Millimeters .Dimensions are for reference only.

nextron®

Tel: +86-755-2605-2427 Fax: +86-755-2642-6035 Email:sales@jhjm.cc Internet: http://www.jhjm.cc

D-SUB Series

Serial D-Sub Connector, Solder(Mixed-Machine Pin)

Pitch:6.86mm/0.27"

Technical Data

Material

- Contact: Copper Alloy
- Plating: (Contact) 1.25um/ 50 u" nickel gold and tin plating see table below
- Boardlock: BRASS
- Plating: (Boardlock) 1.25um/ 50 u" nickel Ni or tin plating
- Insulator body: Glass filled polyester UL 94V-0

Electrical

- Current rating: 20/30/40Amp
- Contact resistance: 30mΩ max
- Insulation resistance: 5000MΩ min
- Dielection Withstanding Voltage: 1000VAC RMS

Mechanical

- Operating Temperature: -40°C to 105°C
- Mating cycle: ⩾500 mating cycle

Applications and Features

- Input / Output Connector
- Available in positions see table below
- Available in plugs and receptacles
- Available molding Insulation with cable after soldering
- Solder cup contacts

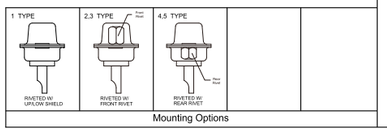

Mounting Options

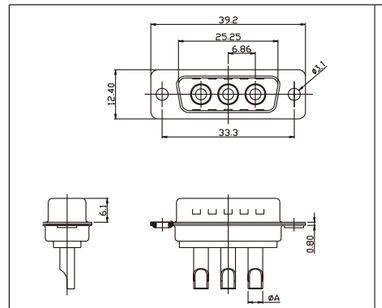

P/N	DIM.A	ELECTRIC
See the table	2.55	10–20A
	3.70	20–30A
	5.50	30–40A

Housing Type: Male

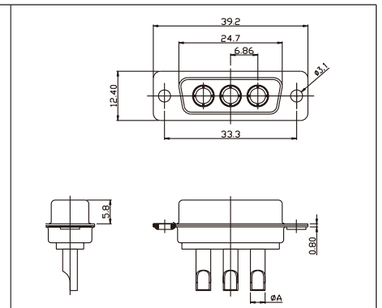

P/N	DIM.A	ELECTRIC
See the table	2.55	10–20A
	3.70	20–30A
	5.50	30–40A

Housing Type: Female

Notes: Please replace "X" with appropriate coding listed in the tables below

S U B — X X X X X X X — X X X — X X X — X

Plastic shape

Code	Definition
E2W2/E2V2/ E5W1	9 PIN
A3W3/P3V3/ A7W2/A11W1	15 PIN
B5W5/B9W4/B13W3 E17W2/E21W1	25 PIN
C8W8/C13W6/C25W3 C21WA4/C27W2	37 PIN
D43W2/D36W4 /D24W7	50 PIN

Housing shape

Code	Definition
C	Circular
F	Noncircular

Housing type

Code	Definition
P	Male
S	Female

Insulator material

Code	Definition
1	PBT+ 30%GF
2	HTN+ 30%GF

Insulator color

Code	Definition
1	Black
3	White
4	Green

Terminal Spec

Code	Definition
1	Dip,20A Signal and power
2	Dip,40A Signal and power
3	Dip,50Ω COAXIAL
4	Dip,Only Signal
5	Right Angle,20A Signal and power
6	Right Angle,40A Signal and power
7	Right Angle,50Ω COAXIAL
8	Right Angle,Only Signal

Terminal Plated

Code	Definition
1	Gold 3u"
2	Gold 15u"
3	Gold 30u"
4	Gold 1u"

Mark

Code	Definition
0	No mark
1	Nextron mark

Attachment From

Code	Definition
1	3.05mm light hole
2	Rear riveting#4-40
3	Rear riveting M3
4	Front riveting#4-40
5	Front riveting M3
6	Riveting NUT
7	Riveting NUT+#4-40
8	Riveting NUT+M3

Note: Dimensions are shown in Millimeters .Dimensions are for reference only.

nextron®

Tel: +86-755-2605-2427 Fax: +86-755-2642-6035 Email:sales@jhjm.cc Internet: http://www.jhjm.cc

D-SUB Series

Serial D-Sub Connector, Standard Dip(Mixed-Machine Pin)

Pitch:6.86mm/0.27"

Technical Data

Material

- Contact: Copper Alloy
- Plating: (Contact) 1.25um/ 50 u" nickel gold and tin plating see table below
- Boardlock: BRASS
- Plating: (Boardlock) 1.25um/ 50 u" nickel Ni or tin plating
- Insulator body: Glass filled polyester UL 94V-0

Electrical

- Current rating: 20/30/40Amp
- Contact resistance: 30mΩ max
- Insulation resistance: 5000MΩ min
- Dielection Withstanding Voltage: 1000VAC RMS

Mechanical

- Operating Temperature: -40°C to 105°C
- Mating cycle: ⩾500 mating cycle

Applications and Features

- Input / Output Connector
- Available in positions see table below
- Available in plugs and receptacles
- Available molding Insulation with cable after soldering
- Solder cup contacts

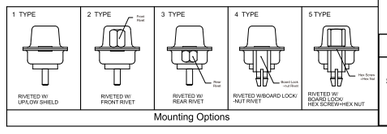

Mounting Options

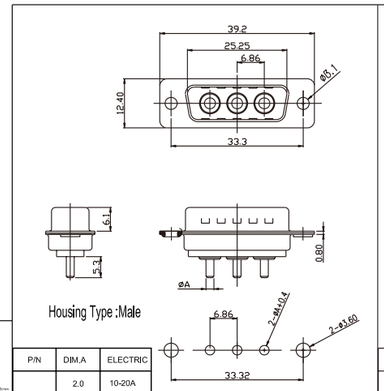

Housing Type :Male

P/N	DIM.A	ELECTRIC
See the table	2.0	10-20A
	2.4	20-30A
	3.2	30-40A

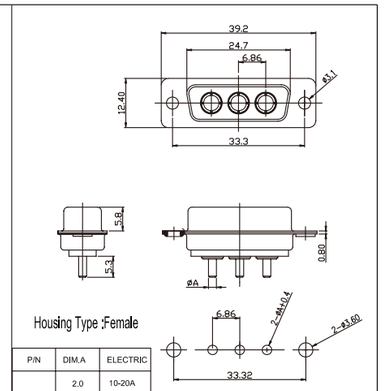

Housing Type :Female

P/N	DIM.A	ELECTRIC
See the table	2.0	10-20A
	2.4	20-30A
	3.2	30-40A

Notes: Please replace "X" with appropriate coding listed in the tables below

SUB — XXXXXXX — XXX — XXX — X

Plastic shape

Code	Definition
E2W2/E2V2/ E5W1	9 PIN
A3W3/P3V3/ A7W2/A11W1	15 PIN
B5W5/B9W4/B13W3 E17W2/E21W1	25 PIN
C8W8/C13W6/C25W3 C21WA4/C27W2	37 PIN
D43W2/D36W4 /D24W7	50 PIN

Housing shape

Code	Definition
C	Circular
F	Noncircular

Housing type

Code	Definition
P	Male
S	Female

Insulator material

Code	Definition
1	PBT+ 30%GF
2	HTN+ 30%GF

Insulator color

Code	Definition
1	Black
3	White
4	Green

Terminal Spec

Code	Definition
1	Dip,20A Signal and power
2	Dip,40A Signal and power
3	Dip,50Ω COAXIAL
4	Dip,Only Signal
5	Right Angle,20A Signal and power
6	Right Angle,40A Signal and power
7	Right Angle,50Ω COAXIAL
8	Right Angle,Only Signal

Terminal Plated

Code	Definition
1	Gold 3u"
2	Gold 15u"
3	Gold 30u"
4	Gold 1u"

Mark

Code	Definition
0	No mark
1	Nextron mark

Attachment From

Code	Definition
1	3.05mm light hole
2	Rear riveting#4-40
3	Rear riveting M3
4	Front riveting#4-40
5	Front riveting M3
6	Riveting NUT
7	Riveting NUT+#4-40
8	Riveting NUT+M3

Note: Dimensions are shown in Millimeters .Dimensions are for reference only.

nextron®

Tel: +86-755-2605-2427 Fax: +86-755-2642-6035 Email:sales@jhjm.cc Internet: http://www.jhjm.cc

SUB Series

Serial D-SUB HOOD 9P DB Type

Pitch:NONE

Technical Data

Material

- Contact: None
- Plating: (Contact) None
- Board lock: None
- Plating: (Board lock) 1.25um/ 50u" nickel tin plating

Insulator body: Glass filled polyester UL 94V-0

Electrical

- Current rating: None
- Contact resistance: None
- Insulation resistance: 1000MΩ min
- Dielection withstanding voltage: 1000VAC RMS

Mechanical

- Operating Temperature: -25°C to 60°C(HIPS) -25°C to 80°C(ABS)
- Mating cycle: ⩾500 mating cycle

Applications and Features

- Inner and Outer Crimp ferrules.
- Used with braid-shielded cable only.
- Available for strain relief, cable clamping, shielding, connector-to connector mating, PC board mounting and keying applications.
- Plated plastic, die cast metal and hardware accessory kits. Straight exit and 90° versions are available.

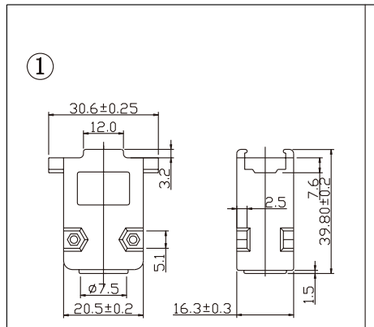

Name: Plastic Main body

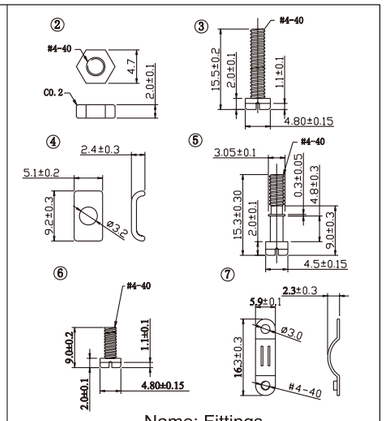

Name: Fittings

Notes: Please replace "X" with appropriate coding listed in the tables below

SUB — B0A0 — 00XX — XXX

Number of contacts

Code	Definition
A	9 PIN
B	15 PIN
C	25 PIN
E	37 PIN

Fittings material

Code	Definition
0	Phosphor bronze
2	Brass
3	Steel
4	stainless steel

Contact Plated

Code	Contact area
0	No plating
N	Ni
P	Colour Zn
Q	Blue Zn
R	Cr^{3+}

Insulator material

Code	Definition
D	ABS No Plated
E	ABS Cr Plated
H	HIPS No Plated

Insulator color

Code	Definition
0	Black
8	Grey
L	Lvory white

Mark

Code	Definition
0	No mark
2	Nextron mark

Note: Dimensions are shown in Millimeters .Dimensions are for reference only.

nextron®

Tel: +86-755-2605-2427 Fax: +86-755-2642-6035 Email:sales@jhjm.cc Internet: http://www.jhjm.cc

nextron®

SUB Series

Serial D-SUB HOOD 25P DB Type

Pitch:NONE

Technical Data

Material

- Contact: None
- Plating: (Contact) None
- Board lock: None
- Plating: (Board lock) 1.25um/ 50u" nickel tin plating

Insulator body: Glass filled polyester UL 94V-0

Electrical

- Current rating: None
- Contact resistance: None
- Insulation resistance: 1000MΩ min
- Dielection withstanding voltage: 1000VAC RMS

Mechanical

- Operating Temperature: -25°C to 60°C(HIPS) -25°C to 80°C(ABS)
- Mating cycle: ⩾500 mating cycle

Applications and Features

- Inner and Outer Crimp ferrules.
- Used with braid-shielded cable only.
- Available for strain relief, cable clamping, shielding, connector-to connector mating, PC board mounting and keying applications.
- Plated plastic, die cast metal and hardware accessory kits. Straight exit and 90° versions are available.

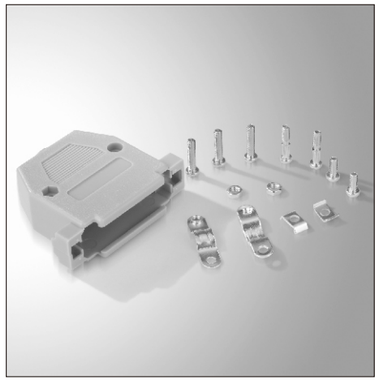

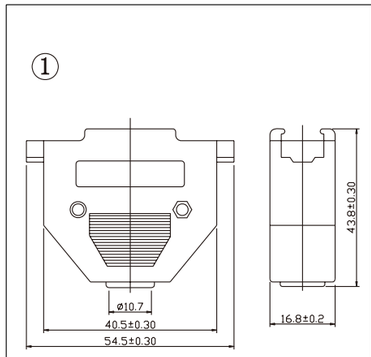

Name: Plastic Main body

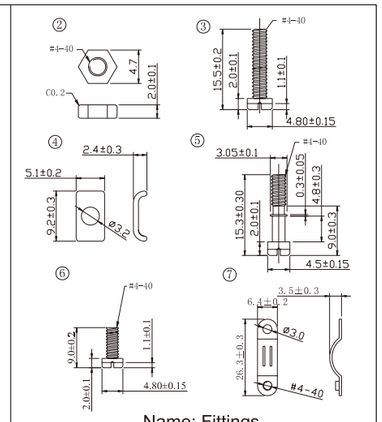

Name: Fittings

Notes: Please replace "X" with appropriate coding listed in the tables below

SUB — B0C0 — 00XX — XXX

Number of contacts

Code	Definition
A	9 PIN
B	15 PIN
C	25 PIN
E	37 PIN

Fittings material

Code	Definition
0	Phosphor bronze
2	Brass
3	Steel
4	stainless steel

Contact Plated

Code	Contact area
0	No plating
N	Ni
P	Colour Zn
Q	Blue Zn
R	Cr^{3+}

Insulator material

Code	Definition
D	ABS No Plated
E	ABS Cr Plated
H	HIPS No Plated

Insulator color

Code	Definition
0	Black
8	Grey
L	Lvory white

Mark

Code	Definition
0	No mark
2	Nextron mark

Note: Dimensions are shown in Millimeters .Dimensions are for reference only.

nextron®

Tel: +86-755-2605-2427 Fax: +86-755-2642-6035 Email:sales@jhjm.cc Internet: http://www.jhjm.cc

nextron®

SUB Series

Serial D-SUB HOOD 37P DB Type

Pitch:NONE

Technical Data

Material

- Contact: None
- Plating: (Contact) None
- Board lock: None
- Plating: (Board lock) 1.25um/ 50u" nickel tin plating

Insulator body: Glass filled polyester UL 94V-0

Electrical

- Current rating: None
- Contact resistance: None
- Insulation resistance: 1000MΩ min
- Dielection withstanding voltage: 1000VAC RMS

Mechanical

- Operating Temperature: -25°C to 60°C(HIPS) -25°C to 80°C(ABS)
- Mating cycle: ⩾500 mating cycle

Applications and Features

- Inner and Outer Crimp ferrules.
- Used with braid-shielded cable only.
- Available for strain relief, cable clamping, shielding, connector-to connector mating, PC board mounting and keying applications.
- Plated plastic, die cast metal and hardware accessory kits. Straight exit and 90° versions are available.

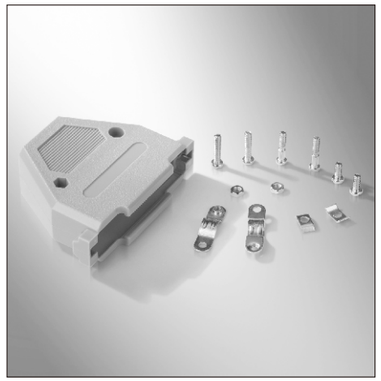

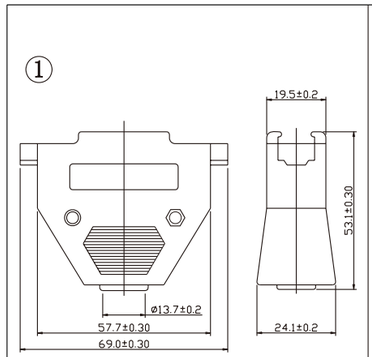

Name: Plastic Main body

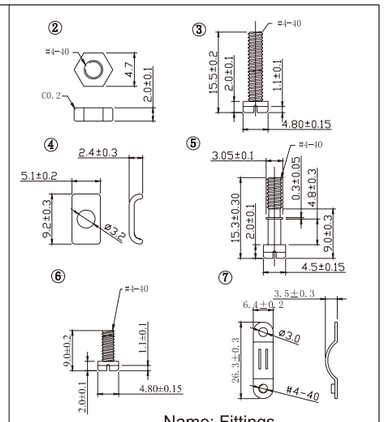

Name: Fittings

Notes: Please replace "X" with appropriate coding listed in the tables below

SUB — B0E0 — 00XX — XXX

Number of contacts

Code	Definition
A	9 PIN
B	15 PIN
C	25 PIN
E	37 PIN

Fittings material

Code	Definition
0	Phosphor bronze
2	Brass
3	Steel
4	stainless steel

Contact Plated

Code	Contact area
0	No plating
N	Ni
P	Colour Zn
Q	Blue Zn
R	Cr^{3+}

Insulator material

Code	Definition
D	ABS No Plated
E	ABS Cr Plated
H	HIPS No Plated

Insulator color

Code	Definition
0	Black
8	Grey
L	Lvory white

Mark

Code	Definition
0	No mark
2	Nextron mark

Note: Dimensions are shown in Millimeters .Dimensions are for reference only.

nextron®

Tel: +86-755-2605-2427 Fax: +86-755-2642-6035 Email:sales@jhjm.cc Internet: http://www.jhjm.cc

SUB Series

Serial D-SUB HOOD 15P DB Type

Pitch:NONE

Technical Data

Material

- Contact: None
- Plating: (Contact) None
- Board lock: None
- Plating: (Board lock) 1.25um/ 50u" nickel tin plating

Insulator body: Glass filled polyester UL 94V-0

Electrical

- Current rating: None
- Contact resistance: None
- Insulation resistance: 1000MΩ min
- Dielection withstanding voltage: 1000VAC RMS

Mechanical

- Operating Temperature: -25°C to 60°C(HIPS) -25°C to 80°C(ABS)
- Mating cycle: ⩾500 mating cycle

Applications and Features

- Inner and Outer Crimp ferrules.
- Used with braid-shielded cable only.
- Available for strain relief, cable clamping, shielding, connector-to connector mating, PC board mounting and keying applications.
- Plated plastic, die cast metal and hardware accessory kits. Straight exit and 90° versions are available.

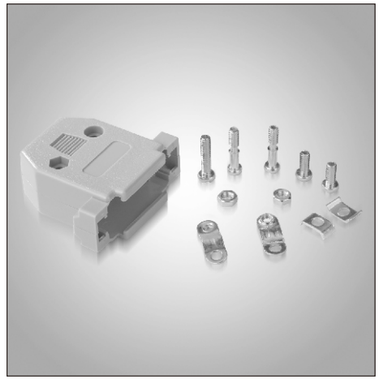

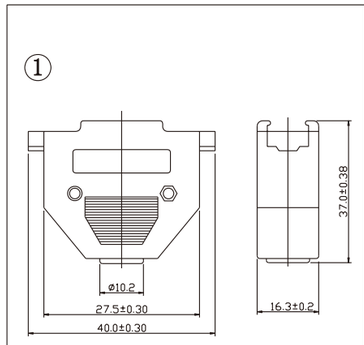

Name: Plastic Main body

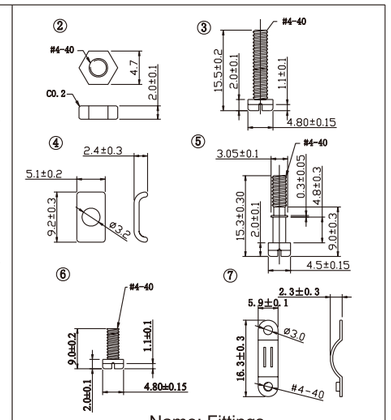

Name: Fittings

Notes: Please replace "X" with appropriate coding listed in the tables below

SUB — B0B0 — 00XX — XXX

Number of contacts

Code	Definition
A	9 PIN
B	15 PIN
C	25 PIN
E	37 PIN

Fittings material

Code	Definition
0	Phosphor bronze
2	Brass
3	Steel
4	stainless steel

Contact Plated

Code	Contact area
0	No plating
N	Ni
P	Colour Zn
Q	Blue Zn
R	Cr^{3+}

Insulator material

Code	Definition
D	ABS No Plated
E	ABS Cr Plated
H	HIPS No Plated

Insulator color

Code	Definition
0	Black
8	Grey
L	Lvory white

Mark

Code	Definition
0	No mark
2	Nextron mark

Note: Dimensions are shown in Millimeters .Dimensions are for reference only.

400 Series

Power Connector

For square post header 3.0mm/0.118"

Technical Data

Material

- Contact: Copper Alloy
- Insertior body Insertior body
- Plating: (Contact) 1.25um/ 50 u" nickel foggy tin plating see table below

Electrical

- Current rating: 8.5 Amp
- Contact resistance: 6mΩ max
- Insulation resistance: 1000MΩ min
- Dielection withstanding Voltage: 500V AC for 1 minute
- Rate voltage: 250V AC

Mechanical

- Insulation force: 800g Max./contact
- Withdrawal force: 200g Min./contact
- Contact retention force: 1.0kg Min.
- Operating Temperature: -40°C to +125°C

Applications and Features

- Double-sided contact.
- Form 2 to 24 position.
- Center coding.
- The connector are available for press-fit,solder and THR process.

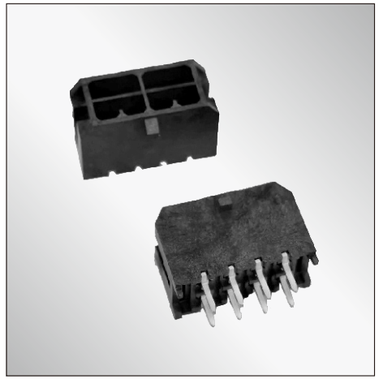

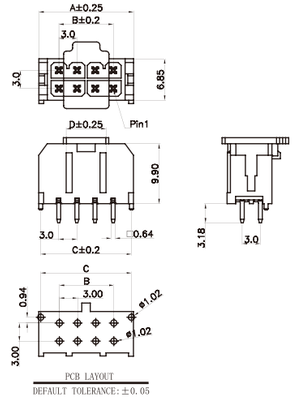

PIN	A±0.25	B±0.20	C±0.20	D±0.20
2	6.65	N/A	6.0	3.00
4	9.65	3.0	9.0	3.00
6	12.65	6.0	12.0	3.00
8	15.65	9.0	15.0	6.60
10	18.65	12.0	18.0	10.70
12	21.65	15.0	21.0	13.70
14	24.65	18.0	24.0	16.70
16	27.65	21.0	27.0	19.70
18	30.65	24.0	30.0	22.70
20	33.65	27.0	33.0	25.70
22	36.65	30.0	36.0	28.70
24	39.65	33.0	39.0	31.70

Notes: Please replace "X" with appropriate coding listed in the tables below

400 — XX11 — 00XX — XX1 — E

NO. of contacts

2~24

Contact type

Code	Definition
1	Straight

Solder tail

Code	Definition
1	3.18mm

Contacts Material

Code	Definition
7	Copper

Contact plated

Code	Contact area	Solder tail
8	Matte tin	Matte tin

Insulator material

Code	Definition
1	LCP

Color of housing

Code	Definition
0	Black

Note: Dimensions are shown in Millimeters .Dimensions are for reference only.

400 Series

Crimping Type Power Housing And Contacts

For square post header 3.0mm/0.118

Technical Data

Material

- Contact: Copper Alloy
- Insertior body: Polyester UL 94V-0
- Plating: (Contact) 1.25um/ 50 u" nickel foggy tin plating see table below

Electrical

- Current rating: 8.5 Amp
- Contact resistance: 6mΩ max
- Insulation resistance: 1000MΩ min
- Dielection withstanding Voltage: 500V AC for 1 minute
- Rate voltage: 250V AC

Mechanical

- Insulation force: 800g Max./contact
- Withdrawal force: 200g Min./contact
- Contact retention force: 1.3kg Min.
- Operating Temperature: -40°C to +125°C

Applications and Features

- Double-sided contact.
- Form 2 to 24 position.
- Application: wire Awg 16~20
- Mates with 0.025(0.64)square or round pin on 0.10X0.10(3.0)centers.

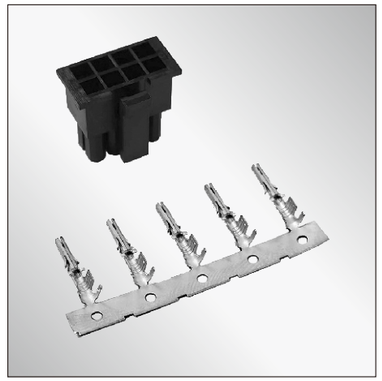

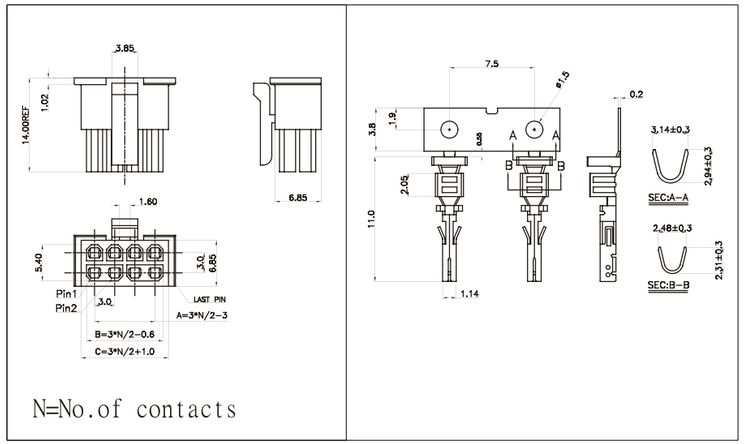

Notes: Please replace "X" with appropriate coding listed in the tables below

B-400-XXXX00X-XXX-E P-400-XXXX-X00-0XX-E

Code	Pin bit
02	2*1 PIN
...	...
24	2*12 PIN

Code	Spacing
00	3.0Spacing

Code	Head structure
0	Stabdard

Code	Material
2	Pa66

Code	Color
0	Black

Code	MR head
0	None
1	Nextron

Code	Product Name
0100	3.0 Pitch Wire End Connector Terminals

Code	Feature
6	Catch 16~20 Awg wire

Code	Material
7	Copper

Code	Plating
0	Material
8	Matte Tin

Note: Dimensions are shown in Millimeters .Dimensions are for reference only.

nextron®

Tel: +86-755-2605-2427 Fax: +86-755-2642-6035 Email:sales@jhjm.cc Internet: http://www.jhjm.cc

400 Series

4.2mm pitch-wire to wire and wire to board connector

4.20mm pitch 180° Double row policy with feet

Solder tail tin- Pin is crimp connected to PCB board

Pitch:4.20mm/0.165"

Technical Data

Material

- Pin Phosphor: BRASS
- Plating: Tin plated: 1.25um/ 50 u" nickel 2.5um/100 u" Tin
- Insulator body: (Black) Glass filled polyester Nylon 66 UL 94V-0

Electrical

- voltage resistance:1000VAC/minute
- Contact resistance: ≤20mΩ /Contact
- Insulation resistance: 1000MΩ/500VDC min
- Operating Voltage: 250V AC/DC.

Mechanical

- Mechanical life cycle: 200 Minimum
- Operating Temperature: -25°C to 105°C

Applications and Features

- wire to board connector -Socket.
- The imported framework version provides easier access
- Use a high retention design to prevent connecting wires for easier access walkout during heavy vibration
- Pin design absolutely prevents 100% of pins press-fit
- Twist free construction

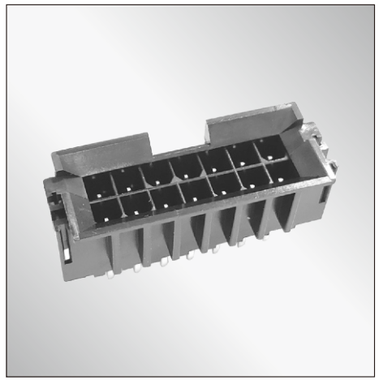

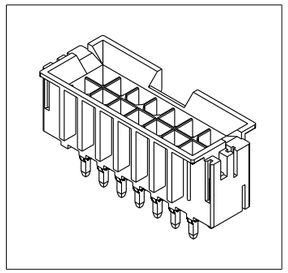

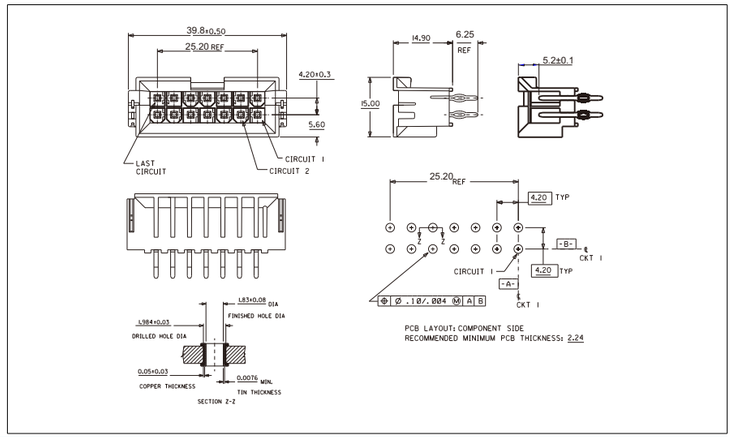

Notes: Please replace "X" with appropriate coding listed in the tables below

400 — XXXX — XXXX — XXX — X

Model code		PCB thickness		connection type		Terminal copper		Terminal plating		Insulator material		Plastic color		Mark	
Code	Definition	Code	Definition	Code	Definition	Code	Definition	Code	Definition	Code	Definition	Code	Definition	Code	Definition
6141	14pin_straight	C	2.5mm	A	pins press-fit	7	BRASS	7	Bright tin	2	PA66	O	Black	0	No mark
														1	Nextron

Note: Dimensions are shown in Millimeters .Dimensions are for reference only.

nextron®

Tel: +86-755-2605-2427 Fax: +86-755-2642-6035 Email:sales@jhjm.cc Internet: http://www.jhjm.cc

nextron®

400 Series

Board to board Custom connector / Double row double head plug

Pitch:2.54mmX4.00mm/0.1"X0.158"

Technical Data

Material

- Contact: Copper Alloy Standard-Brass
- Plating: (Contact) 1.25um/ 50 u" nickel gold and tin plating see table below
- Insulator body: Glass filled polyester UL 94V-0 Standard-LCP

Electrical

- Current rating: 3 Amp
- Contact resistance: 20mΩ max
- Insulation resistance: 1000MΩ min DC
- Dielection withstanding Voltage: 500V AC for 1 minute
- Rate voltage: 250V AC

Mechanical

- Operating Temperature: -55°C to 125°C
- Mating cycle: ＞50 mating cycle

Applications and Features

- The product has a certain floating tolerance. After the male and female are matched, the x-axis, Y-axis direction is plus or minus 0.5mm, and the z-axis tolerance is plus or minus 1mm;
- Two end adapter female seat:400-FM32-0086-100

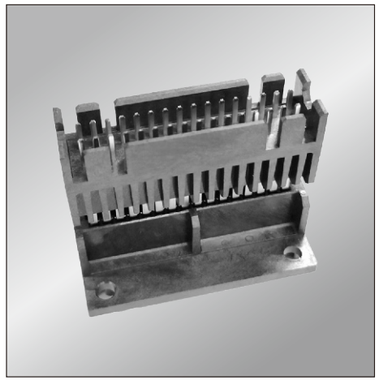

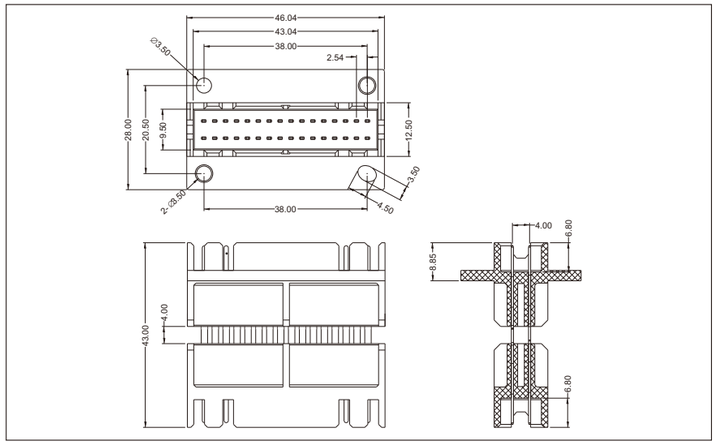

Notes: Please replace "X" with appropriate coding listed in the tables below

4 0 0 — H D 3 2 — F 0 2 M — 1 0 0

Height

Code	DIM"H"
D	93.6mm
E	80.6mm
F	43.0mm
H	82.6mm
K	60.6mm
L	32.9mm

Contact Material

Code	Definition
2	Brass
7	Phosphor

Contact plating

Code	Definition	
	Termination	Contact
J	Tin plated	Au5u"
M	Tin plated	Au30u"

Insulator material

Code	Definition
1	LCP

Mark

Code	Definition
0	No mark
1	Nextron

Note: Dimensions are shown in Millimeters .Dimensions are for reference only.

nextron®

Tel: +86-755-2605-2427 Fax: +86-755-2642-6035 Email:sales@jhjm.cc Internet: http://www.jhjm.cc

nextron®

400 Series

Board to board Custom connector / double row Socket

Pitch:2.54mmX4.00mm/0.1"X0.158"

Technical Data

Material

- Contact: Copper Alloy Standard-Brass
- Plating: (Contact) 1.25um/ 50 u" nickel gold and tin plating see table below
- Insulator body: Glass filled polyester UL 94V-0 Standard-LCP

Electrical

- Current rating: 3 Amp
- Contact resistance: 20mΩ max
- Insulation resistance: 1000MΩ min DC
- Dielection withstanding Voltage: 500V AC for 1 minute
- Rate voltage: 250V AC

Mechanical

- Operating Temperature: -55°C to 125°C
- Mating cycle: ＞50 mating cycle

Applications and Features

- The product has a certain floating tolerance. After the male and female are matched, the x-axis, Y-axis direction is plus or minus 0.5mm, and the z-axis tolerance is plus or minus 1mm;
- The connector are available for solder and THR process.

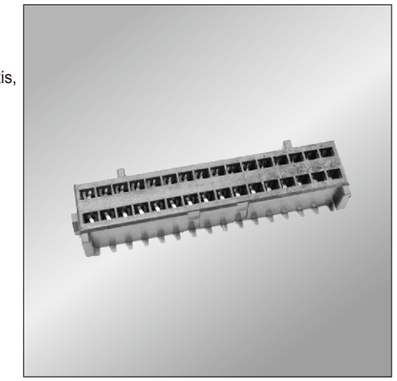

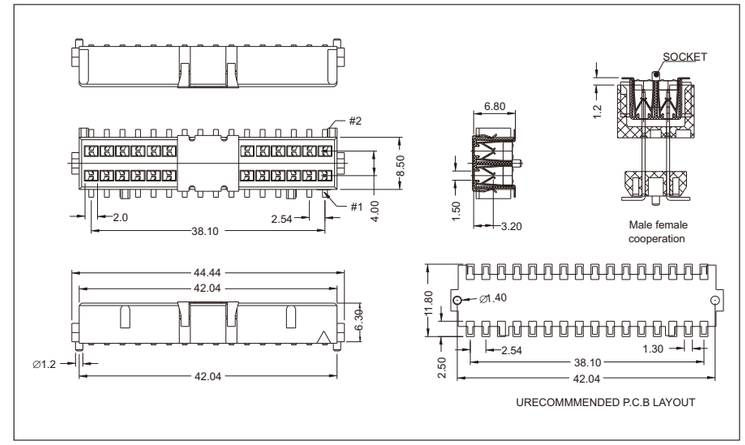

Notes: Please replace "X" with appropriate coding listed in the tables below

4 0 0 — F M 3 2 — 0 0 8 6 — 1 0 0

Contact Material

Code	Definition
2	Brass
8	Phosphor

Contact plating

Code	Definition	
	Termination	Contact
6	Tin plated	Au30u"

Insulator material

Code	Definition
1	LCP

Mark

Code	Definition
0	No mark
1	Nextron

Note: Dimensions are shown in Millimeters .Dimensions are for reference only.

nextron®

Tel: +86-755-2605-2427 Fax: +86-755-2642-6035 Email:sales@jhjm.cc Internet: http://www.jhjm.cc

nextron®

High Power Socket Gold finger connector
2.54mm Female Socket , Dual Row/Right Angle

400 Series

Technical Data

Material

- Contact: Copper Alloy
- Plating: (Contact) 1.25um/ 50 u" nickel gold and tin plating see table below
- Insulator body: Glass filled polyester UL 94V-0

Applications and Features

- Power signal transmission
- Low end servers
- DASD (Direct Access Storage) systems/arrays

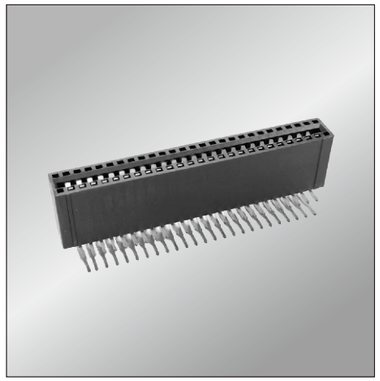

Electrical

- Current rating: 10 A/Pin
- Contact resistance: 10mΩ max
- Insulation resistance: 1000MΩ min
- Dielection withstanding Voltage: 500VAC RMS

Mechanical

- Operating Temperature: -55°C to 125°C

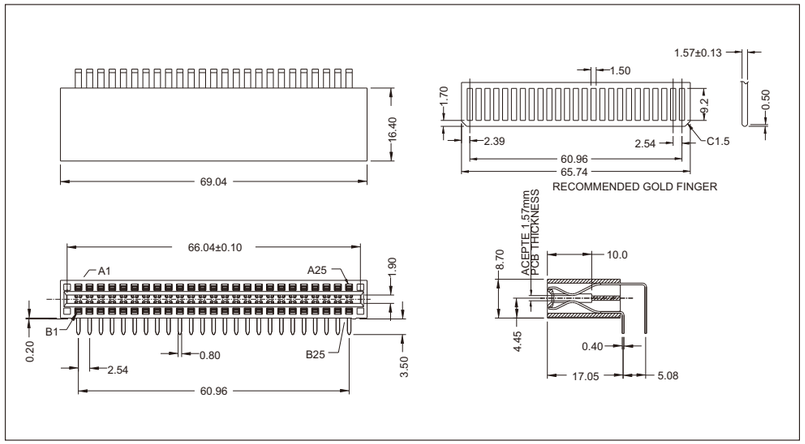

Notes: Please replace "X" with appropriate coding listed in the tables below

4 0 0 — H P 5 0 — R 1 B L — 4 0 0

Contact Material

Code	Definition
B	High Performance Copper Alloy

Contact plating

Code	Definition	
	Termination	Contact
L	Tin plated	Au10u"
M	Tin plated	Au15u"

Insulator material

Code	Definition
4	PA6T

Mark

Code	Definition
0	No mark
1	Nextron

Note: Dimensions are shown in Millimeters .Dimensions are for reference only.

nextron®
Tel: +86-755-2605-2427 Fax: +86-755-2642-6035 Email:sales@jhjm.cc Internet: http://www.jhjm.cc

nextron®

2.54mm Female Header , Multi Row, Press Fit

400 Series

Technical Data

Material

- Contact: Copper Alloy
- Plating: (Contact) 1.25um/ 50 u" nickel gold and tin plating see table below
- Insulator body: Glass filled polyester UL 94V-0

Applications and Features

- Power signal transmission
- Low end servers
- DASD (Direct Access Storage) systems/arrays
- Mates with 0.025(0.64)square

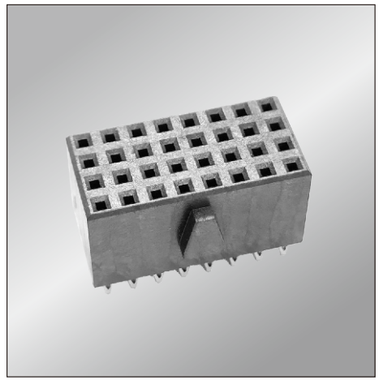

Electrical

- Current rating: 3.0 Amp AC,DC
- Contact resistance: 20mΩ max
- Insulation resistance: 1000MΩ min
- Dielection withstanding Voltage: 1000VAC RMS

Mechanical

- Operating Temperature: -55°C to 125°C

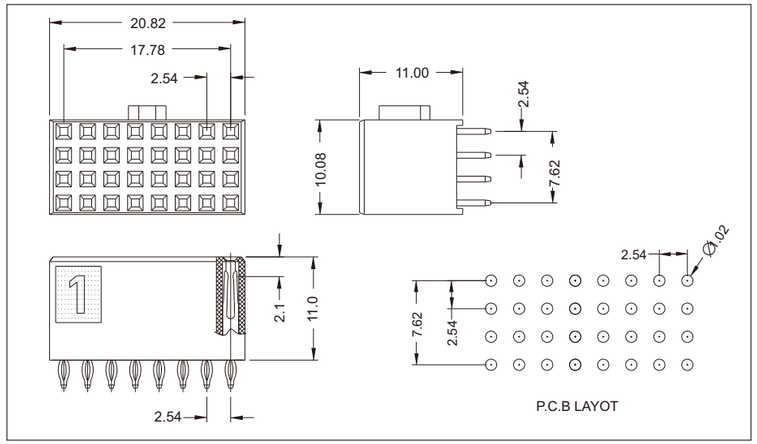

Notes: Please replace "X" with appropriate coding listed in the tables below

4 0 0 — 3 2 F M — 0 0 7 E — 1 0 0

Contact Material

Code	Definition
2	Brass
7	Phosphor

Contact plating

Code	Definition	
	Termination	Contact
J	Tin plated	Au5u"
E	Tin plated	Au15u"

Insulator material

Code	Definition
1	LCP

Mark

Code	Definition
0	No mark
1	Nextron

Note: Dimensions are shown in Millimeters .Dimensions are for reference only.

nextron®
Tel: +86-755-2605-2427 Fax: +86-755-2642-6035 Email:sales@jhjm.cc Internet: http://www.jhjm.cc

400 Series

2.54mm Pin Header , Straight , SMT /Press Fit

Technical Data

Material

- Contact: Copper Alloy
- Plating: (Contact) 1.25um/ 50 u" nickel gold and tin plating see table below
- Insulator body: Glass filled polyester UL 94V-0

Applications and Features

- Power signal transmission
- Low end servers
- DASD (Direct Access Storage) systems/arrays
- The connector hardware adopts the method of welding first and then crimping to achieve PCB board to board connection

Electrical

- Current rating: 3.0 Amp AC,DC
- Contact resistance: 20mΩ max
- Insulation resistance: 1000MΩ min
- Dielection withstanding Voltage: 1000VAC RMS

Mechanical

- Operating Temperature: -55°C to 125°C

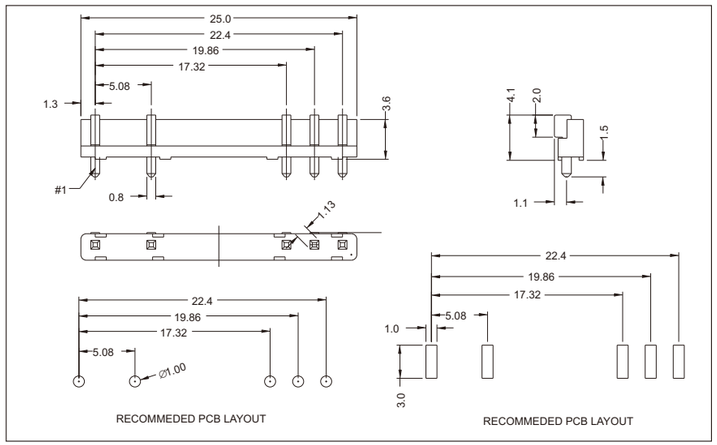

Notes: Please replace "X" with appropriate coding listed in the tables below

4 0 0 — H P A 5 — 0 0 2 1 — 4 0 0

NO. of contacts

Code	Definition
Non-standard	
A5	5 Pin

Contact Material

Code	Definition
2	Brass
7	Phosphor

Contact plating

Code	Definition
1	Au1u"
2	Au3u"

Insulator material

Code	Definition
1	LCP
4	PA6T/HTN

Mark

Code	Definition
0	No mark
1	Nextron

Note: Dimensions are shown in Millimeters .Dimensions are for reference only.

Tel: +86-755-2605-2427 Fax: +86-755-2642-6035 Email:sales@jhjm.cc Internet: http://www.jhjm.cc

400 Series

2.54mm Box Header , Double Row, Straight

Technical Data

Material

- Contact: Copper Alloy
- Plating: (Contact) 1.25um/ 50 u" nickel gold and tin plating sÉe table below
- Insulator body: Glass filled polyester UL 94V-0

Applications and Features

- Power signal transmission
- Low end servers
- DASD (Direct Access Storage) systems/arrays
- Mates with 214-32FA-027C-000

Electrical

- Current rating: 3.0 Amp AC,DC
- Contact resistance: 20mΩ max
- Insulation resistance: 1000MΩ min
- Dielection withstanding Voltage: 1000VAC RMS

Mechanical

- Operating Temperature: -55°C to 125°C

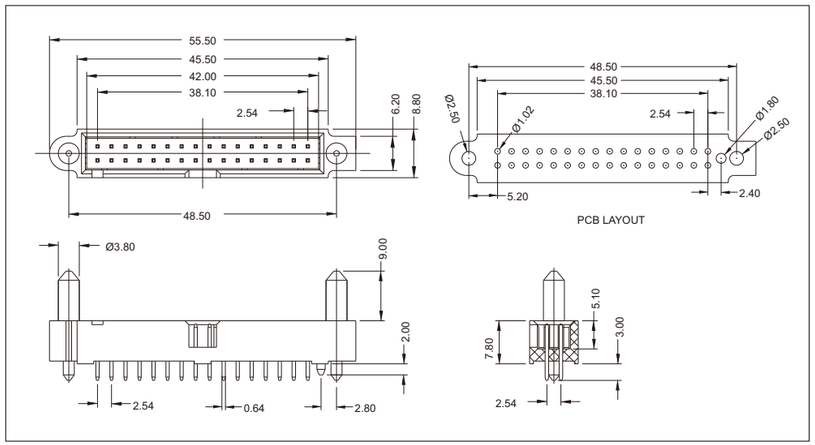

Notes: Please replace "X" with appropriate coding listed in the tables below

4 0 0 — D H 3 2 — M 0 2 C — 1 0 0

Contact Material

Code	Definition
2	Brass
7	Phosphor

Contact plating

Code	Definition	
	Termination	Contact
B	Tin plated	Au3u"
C	Tin plated	Au5u"

Insulator material

Code	Definition
1	LCP

Mark

Code	Definition
0	No mark
1	Nextron

Note: Dimensions are shown in Millimeters .Dimensions are for reference only.

Tel: +86-755-2605-2427 Fax: +86-755-2642-6035 Email:sales@jhjm.cc Internet: http://www.jhjm.cc

400 Series

2.54mm Box Header , Double Row, Straight

Technical Data

Material

- Contact: Copper Alloy
- Plating: (Contact) 1.25um/ 50 u" nickel gold and tin plating see table below
- Insulator body: Glass filled polyester UL 94V-0

Electrical

- Current rating: 3.0 Amp AC,DC
- Contact resistance: 20mΩ max
- Insulation resistance: 1000MΩ min
- Dielection withstanding Voltage: 1000VAC RMS

Mechanical

- Operating Temperature: -40°C to 105°C

Applications and Features

- Power signal transmission
- Low end servers
- DASD (Direct Access Storage) systems/arrays
- Mates with 214-20A7-N67E-000

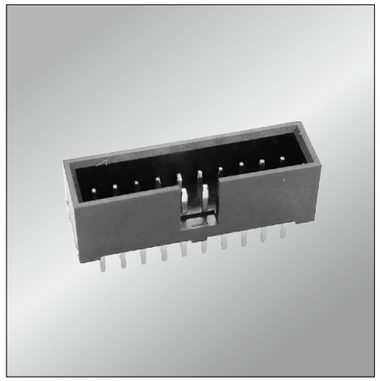

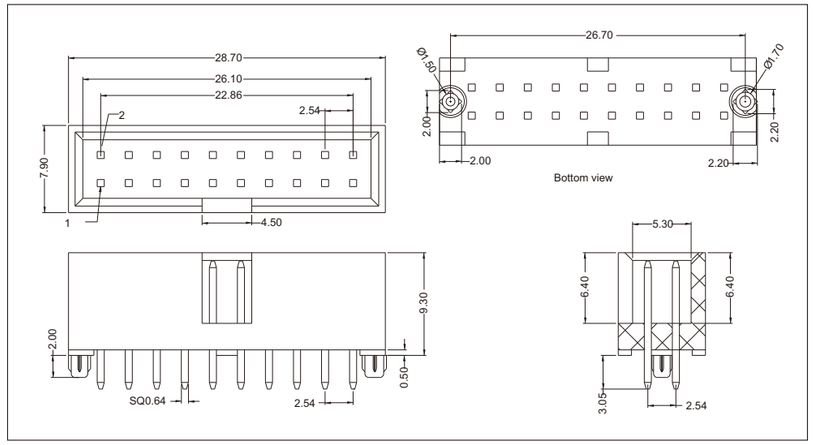

Notes: Please replace "X" with appropriate coding listed in the tables below

4 0 0 — B H 2 0 — 0 C 2 E — 1 0 0

Contact Material

Code	Definition
2	Brass
7	Phosphor

Contact plating

Code	Definition(Contact)
E	Au5u"

Insulator material

Code	Definition
1	LCP

Mark

Code	Definition
0	No mark
1	Nextron

Note: Dimensions are shown in Millimeters .Dimensions are for reference only.

Tel: +86-755-2605-2427 Fax: +86-755-2642-6035 Email:sales@jhjm.cc Internet: http://www.jhjm.cc

400 Series

2.54mm Box Header , Multi Row, Press Fit

Technical Data

Material

- Contact: Copper Alloy
- Plating: (Contact) 1.25um/ 50 u" nickel gold and tin plating see table below
- Insulator body: Glass filled polyester UL 94V-0

Electrical

- Current rating: 3.0 Amp
- Contact resistance: 20mΩ
- Insulation resistance: 1000MΩ
- Dielection withstanding Voltage: 1000V

Mechanical

- Operating Temperature: -55°C to 125°C

Applications and Features

- Power signal transmission
- Low end servers
- DASD (Direct Access Storage) systems/arrays

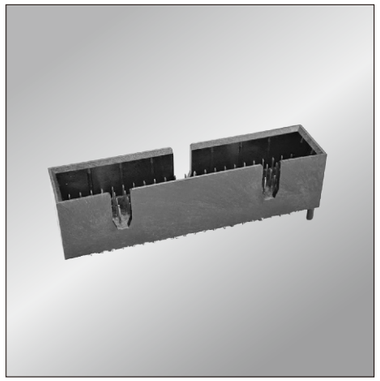

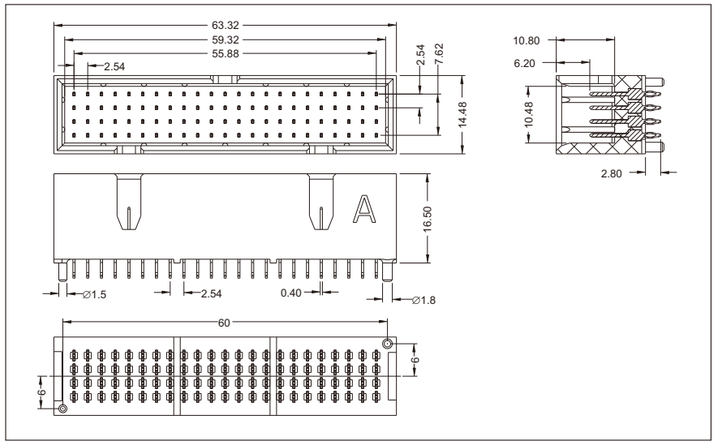

Notes: Please replace "X" with appropriate coding listed in the tables below

4 0 0 — H D 9 2 — 0 0 7 P — 1 0 0

Contact Material

Code	Definition
2	Brass
7	Phosphor

Contact plating

Code	Definition	
	Termination	Contact
J	Tin plated	Au5u"
P	Tin plated	Au12u"

Insulator material

Code	Definition
1	LCP

Mark

Code	Definition
0	No mark
1	Nextron

Note: Dimensions are shown in Millimeters .Dimensions are for reference only.

Tel: +86-755-2605-2427 Fax: +86-755-2642-6035 Email:sales@jhjm.cc Internet: http://www.jhjm.cc

400 Series

2.54mm Box Header , Multi Row, Straight

Technical Data

Material

- Contact: Copper Alloy
- Plating: (Contact) 1.25um/ 50 u" nickel gold and tin plating see table below
- Insulator body: Glass filled polyester UL 94V-0

Applications and Features

- Power signal transmission
- Low end servers
- DASD (Direct Access Storage) systems/arrays
- Mates with 0.025(0.64)square

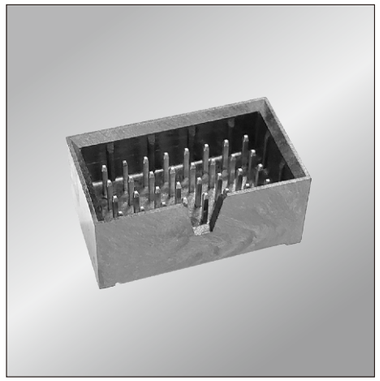

Electrical

- Current rating: 3.0 Amp AC,DC
- Contact resistance: 20mΩ max
- Insulation resistance: 1000MΩ min
- Dielection withstanding Voltage: 1000VAC RMS

Mechanical

- Operating Temperature: -55°C to 125°C

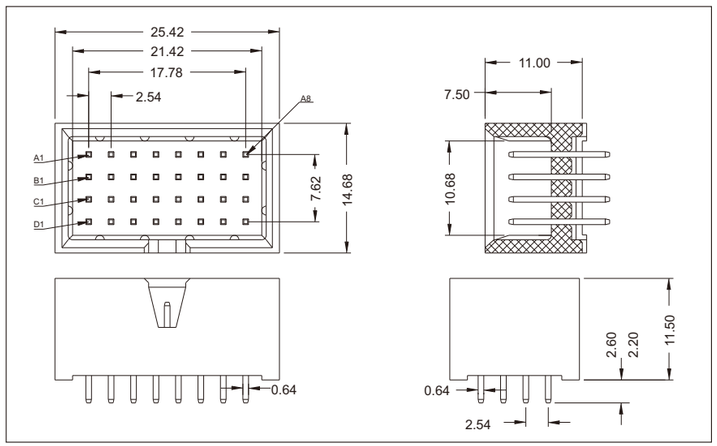

Notes: Please replace "X" with appropriate coding listed in the tables below

4 0 0 — 3 2 H D — 0 0 2 5 — 1 0 0

Contact Material

Code	Definition
2	Brass
7	Phosphor

Contact plating

Code	Definition	
	Termination	Contact
5	Tin plated	Au15u"
J	Tin plated	Au5u"

Insulator material

Code	Definition
1	LCP

Mark

Code	Definition
0	No mark
1	Nextron

Note: Dimensions are shown in Millimeters .Dimensions are for reference only.

Tel: +86-755-2605-2427 Fax: +86-755-2642-6035 Email:sales@jhjm.cc Internet: http://www.jhjm.cc

400 Series

2.54mm Pin Header , U type Double Row, Straight

Technical Data

Material

- Contact: Copper Alloy
- Plating: (Contact) 1.25um/ 50 u" nickel gold and tin plating see table below
- Insulator body: Glass filled polyester UL 94V-0

Applications and Features

- Cross board connectors are used for signal and power transmission
- Mates with 214-2018-187E-100

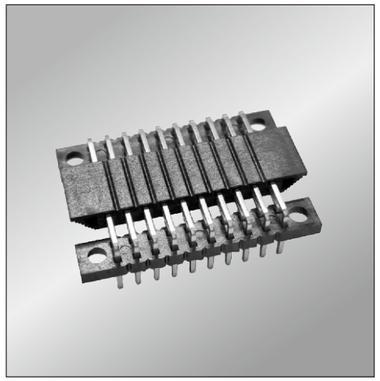

Electrical

- Current rating: 3.0 Amp AC,DC
- Contact resistance: 20mΩ max
- Insulation resistance: 1000MΩ min
- Dielection withstanding Voltage: 1000VAC RMS

Mechanical

- Operating Temperature: -40°C to 105°C

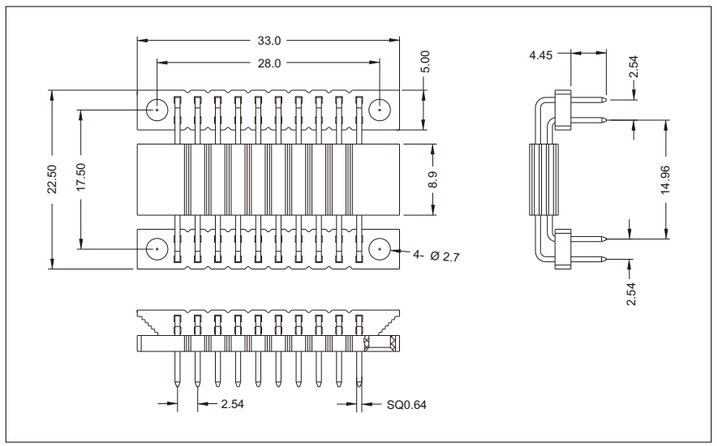

Notes: Please replace "X" with appropriate coding listed in the tables below

4 0 0 — B L 2 0 — 0 E 2 2 — 1 0 0

Contact Material

Code	Definition
2	Brass
7	Phosphor

Contact plating

Code	Definition
2	Au3u"
3	Au5u"

Insulator material

Code	Definition
1	LCP

Mark

Code	Definition
0	No mark
1	Nextron

Note: Dimensions are shown in Millimeters .Dimensions are for reference only.

Tel: +86-755-2605-2427 Fax: +86-755-2642-6035 Email:sales@jhjm.cc Internet: http://www.jhjm.cc

400 Series

5.08mm Custom connector , Single Row, Straight

Technical Data

Material

- Contact: Copper Alloy
- Plating: (Contact) 1.25um/ 50 u" nickel gold and tin plating see table below
- Insulator body: Glass filled polyester UL 94V-0

Electrical

- Current rating: 3.0 Amp AC,DC
- Contact resistance: 20mΩ max
- Insulation resistance: 1000MΩ min
- Dielection withstanding Voltage: 1000VAC RMS

Mechanical

- Operating Temperature: -40°C to 105°C

Applications and Features

- Low power connector
- Low end servers
- DASD (Direct Access Storage) systems/arrays
- Mates with 400-FMM2-0D71-100

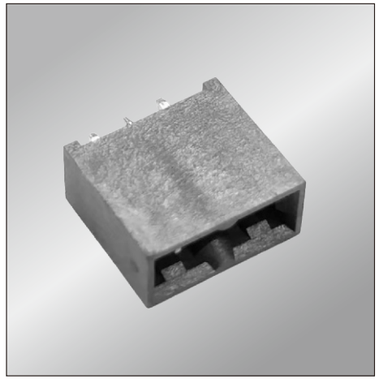

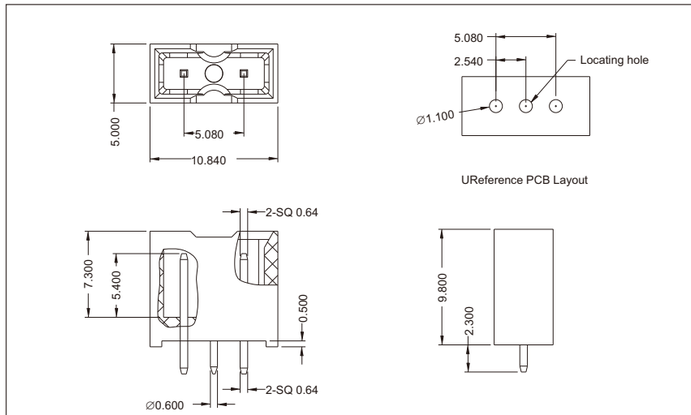

Notes: Please replace "X" with appropriate coding listed in the tables below

4 0 0 — B H 0 2 — 0 D 2 1 — 1 0 0

Contact Material

Code	Definition
2	Brass
7	Phosphor

Contact plating

Code	Definition(Contact)
1	Au1u"
2	Au3u"

Insulator material

Code	Definition
1	LCP

Mark

Code	Definition
0	No mark
1	Nextron

Note: Dimensions are shown in Millimeters .Dimensions are for reference only.

Tel: +86-755-2605-2427 Fax: +86-755-2642-6035 Email:sales@jhjm.cc Internet: http://www.jhjm.cc

400 Series

Board to board Custom connector / Double row double head plug

Pitch:2.54mmX4.00mm/0.1"X0.158"

Technical Data

Material

- Contact: Copper Alloy Standard-Brass
- Plating: (Contact) 1.25um/ 50 u" nickel gold and tin plating see table below
- Insulator body: Glass filled polyester UL 94V-0 Standard-LCP

Electrical

- Current rating: 3 Amp
- Contact resistance: 20mΩ max
- Insulation resistance: 1000MΩ min DC
- Dielection withstanding Voltage: 500V AC for 1 minute
- Rate voltage: 250V AC

Mechanical

- Operating Temperature: -55°C to 125°C
- Mating cycle: U＞50 mating cycle

Applications and Features

- The product has a certain floating tolerance. After the male and female are matched, the x-axis, Y-axis direction is plus or minus 0.5mm, and the z-axis tolerance is plus or minus 1mm;
- Two end adapter female seat:400-FM32-0086-100

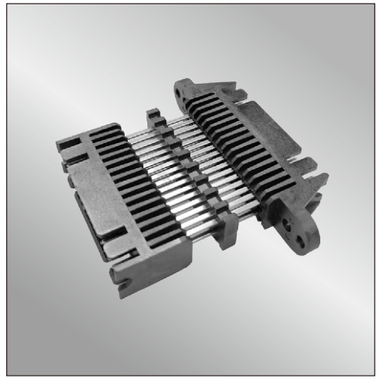

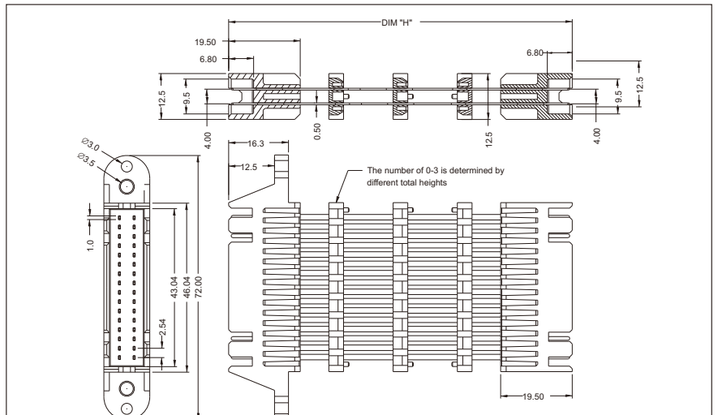

Notes: Please replace "X" with appropriate coding listed in the tables below

4 0 0 — H D 3 2 — X 0 2 M — 1 0 0

Height

Code	DIM"H"
D	93.6mm
E	80.6mm
F	43.0mm
H	82.6mm
K	60.6mm
L	32.9mm

Contact Material

Code	Definition
2	Brass
7	Phosphor

Contact plating

Code	Definition	
	Termination	Contact
J	Tin plated	Au5u"
M	Tin plated	Au30u"

Insulator material

Code	Definition
1	LCP

Mark

Code	Definition
0	No mark
1	Nextron

Note: Dimensions are shown in Millimeters .Dimensions are for reference only.

Tel: +86-755-2605-2427 Fax: +86-755-2642-6035 Email:sales@jhjm.cc Internet: http://www.jhjm.cc

nextron®

400 Series

Board to board Custom connector / double row plugs
Pitch:2.54mmX4.00mm/0.1"X0.158"

Technical Data

Material

- Contact: Copper Alloy Standard-Brass
- Plating: (Contact) 1.25um/ 50 u" nickel gold and tin plating see table below
- Insulator body: Glass filled polyester UL 94V-0 Standard-LCP

Electrical

- Current rating: 3 Amp
- Contact resistance: 20mΩ max
- Insulation resistance: 1000MΩ min DC
- Dielection withstanding Voltage: 500V AC for 1 minute
- Rate voltage: 250V AC

Mechanical

- Operating Temperature: -55°C to 125°C
- Mating cycle: U＞50 mating cycle

Applications and Features

- The product has a certain floating tolerance. After the male and female are matched, the x-axis, Y-axis direction is plus or minus 0.5mm, and the z-axis tolerance is plus or minus 1mm;
- The connector are available for solder and THR process.

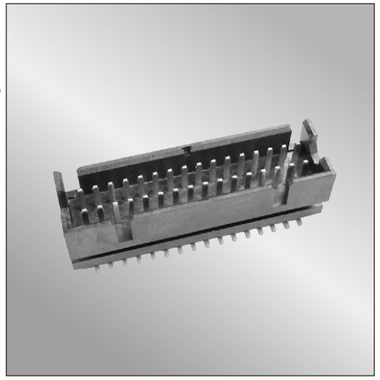

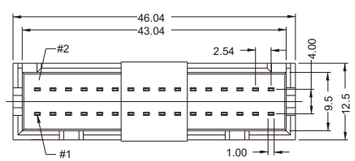

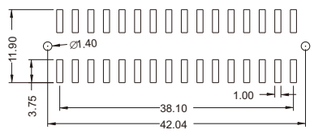

URECOMMMENDED P.C.B LAYOUT

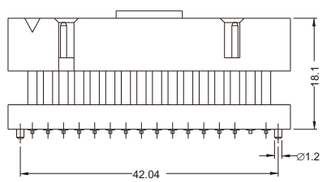

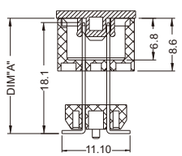

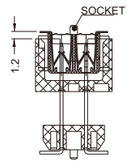

Male female cooperation

Notes: Please replace "X" with appropriate coding listed in the tables below

4 0 0 — H D 3 2 — X 0 2 M — 1 0 0

Height

Code	DIM"A"
0	18.8mm
A	10.6mm
B	21.3mm
C	16.8mm

Contact Material

Code	Definition
2	Brass
7	Phosphor

Contact plating

Code	Definition	
	Termination	Contact
J	Tin plated	Au5u"
M	Tin plated	Au30u"

Insulator material

Code	Definition
1	LCP

Mark

Code	Definition
0	No mark
1	Nextron

Note: Dimensions are shown in Millimeters .Dimensions are for reference only.

nextron®

Tel: +86-755-2605-2427 Fax: +86-755-2642-6035 Email:sales@jhjm.cc Internet: http://www.jhjm.cc

nextron®

400 Series

Two core power plug (6A)

Technical Data

Material

- Contact: Copper Alloy
- Plating: (Contact) 1.25um/ 50 u" nickel gold and tin plating see table below
- Insulator body: Glass filled polyester UL 94V-0

Electrical

- Current rating: 1.5 Amp ,DC
- Contact resistance: 20mΩ max
- Insulation resistance: 100MΩ min
- Dielection withstanding Voltage: 500VAC RMS

Mechanical

- Operating Temperature: -20°C to 105°C

Applications and Features

- Power signal transmission
- Server application Power crystal head
- Mates with RJ45 connector (module-jack) The connector complies with RJ45 interface dimension specification

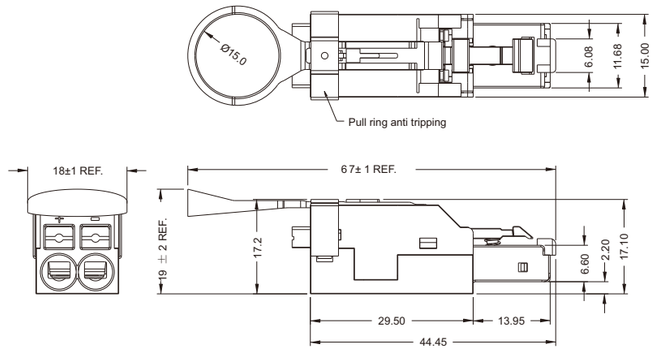

Notes: Please replace "X" with appropriate coding listed in the tables below

R J 8 — C A 6 — 2 P — S

Contact plating

Code	Definition	
	Termination	Contact
P	Tin plated	Au15u"
M	Tin plated	Au30u"

Mark

Code	Definition
0	No mark
1	Nextron

Note: Dimensions are shown in Millimeters .Dimensions are for reference only.

nextron®

Tel: +86-755-2605-2427 Fax: +86-755-2642-6035 Email:sales@jhjm.cc Internet: http://www.jhjm.cc

400 Series

2.54mm Female Header , Multi Row, Straight

Technical Data

Material

- Contact: Copper Alloy
- Plating: (Contact) 1.25um/ 50 u" nickel gold and tin plating see table below
- Insulator body: Glass filled polyester UL 94V-0

Applications and Features

- Power signal transmission
- Low end servers
- DASD (Direct Access Storage) systems/arrays
- Mates with 0.025(0.64)square

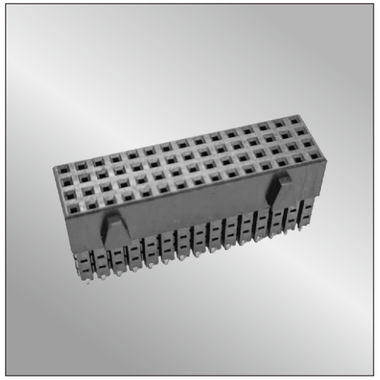

Electrical

- Current rating: 3.0 Amp AC,DC
- Contact resistance: 20mΩ max
- Insulation resistance: 1000MΩ min
- Dielection withstanding Voltage: 1000VAC RMS

Mechanical

- Operating Temperature: -55°C to 125°C

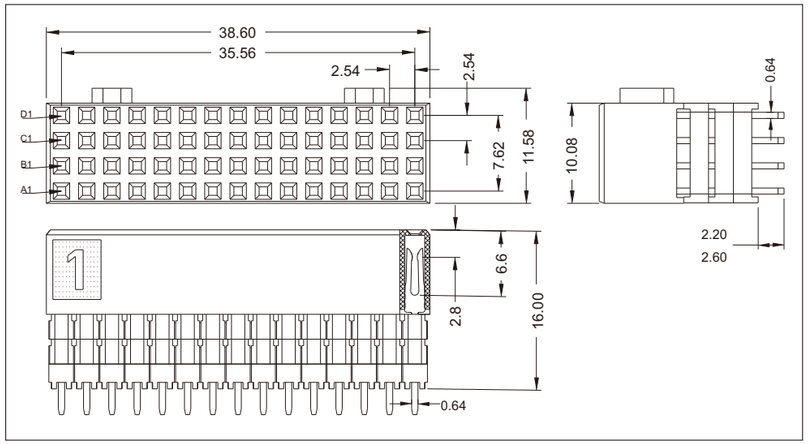

Notes: Please replace "X" with appropriate coding listed in the tables below

4 0 0 — F M 6 0 — 0 0 7 E — 1 0 0

Contact Material

Code	Definition
2	Brass
7	Phosphor

Contact plating

Code	Definition	
	Termination	Contact
J	Tin plated	Au5u"
E	Tin plated	Au15u"

Insulator material

Code	Definition
1	LCP

Mark

Code	Definition
0	No mark
1	Nextron

Note: Dimensions are shown in Millimeters .Dimensions are for reference only.

nextron®

Tel: +86-755-2605-2427 Fax: +86-755-2642-6035 Email:sales@jhjm.cc Internet: http://www.jhjm.cc

400 Series

2.54mm Pin Header , Straight , SMT /Press Fit

Technical Data

Material

- Contact: Copper Alloy
- Plating: (Contact) 1.25um/ 50 u" nickel gold and tin plating see table below
- Insulator body: Glass filled polyester UL 94V-0

Applications and Features

- Power signal transmission
- Low end servers
- DASD (Direct Access Storage) systems/arrays
- The connector hardware adopts the method of welding first and then crimping to achieve PCB board to board connection

Electrical

- Current rating: 3.0 Amp AC,DC
- Contact resistance: 20mΩ max
- Insulation resistance: 1000MΩ min
- Dielection withstanding Voltage: 1000VAC RMS

Mechanical

- Operating Temperature: -55°C to 125°C

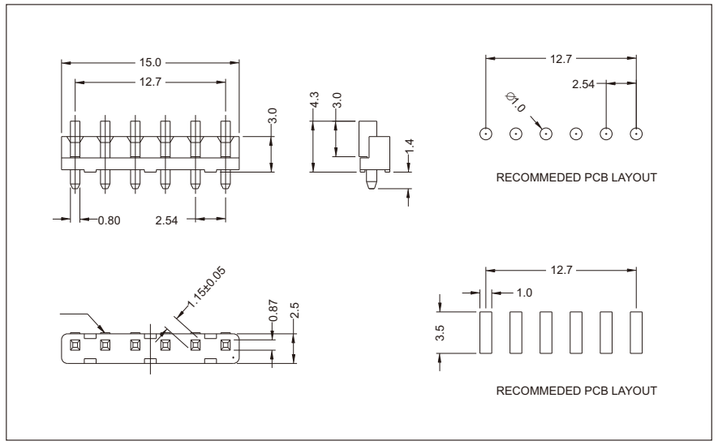

Notes: Please replace "X" with appropriate coding listed in the tables below

4 0 0 — H P 0 6 — 0 0 2 1 — 4 0 0

NO. of contacts

Code	Definition
06	6 Pin
09	9 Pin

Contact Material

Code	Definition
2	Brass
7	Phosphor

Contact plating

Code	Definition
1	Au1u"
2	Au3u"

Insulator material

Code	Definition
1	LCP
4	PA6T

Mark

Code	Definition
0	No mark
1	Nextron

Note: Dimensions are shown in Millimeters .Dimensions are for reference only.

nextron®

Tel: +86-755-2605-2427 Fax: +86-755-2642-6035 Email:sales@jhjm.cc Internet: http://www.jhjm.cc

400 Series

2.54mm Female Header , Multi Row, Press Fit

Technical Data

Material

- Contact: Copper Alloy
- Plating: (Contact) 1.25um/ 50 u" nickel gold and tin plating see table below
- Insulator body: Glass filled polyester UL 94V-0

Applications and Features

- Power signal transmission
- Low end servers
- DASD (Direct Access Storage) systems/arrays

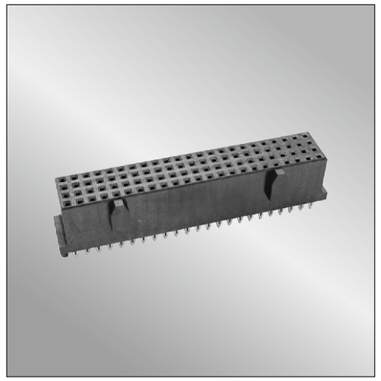

Electrical

- Current rating: 3.0 Amp
- Contact resistance: 20mΩ
- Insulation resistance: 1000MΩ
- Dielection withstanding Voltage: 1000V

Mechanical

- Operating Temperature: -55°C to 125°C

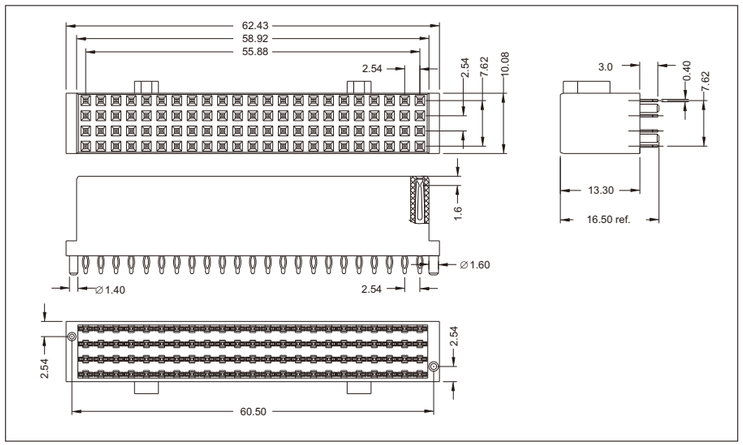

Notes: Please replace "X" with appropriate coding listed in the tables below

4 0 0 — F M 9 2 — 0 0 7 P — 1 0 0

Contact Material

Code	Definition
2	Brass
7	Phosphor

Contact plating

Code	Definition	
	Termination	Contact
J	Tin plated	Au5u"
P	Tin plated	Au12u"

Insulator material

Code	Definition
1	LCP

Mark

Code	Definition
0	No mark
1	Nextron

Note: Dimensions are shown in Millimeters .Dimensions are for reference only.

Tel: +86-755-2605-2427 Fax: +86-755-2642-6035 Email:sales@jhjm.cc Internet: http://www.jhjm.cc

400 Series

2.54mm Box Header , Multi Row, Straight

Technical Data

Material

- Contact: Copper Alloy
- Plating: (Contact) 1.25um/ 50 u" nickel gold and tin plating see table below
- Insulator body: Glass filled polyester UL 94V-0

Applications and Features

- Power signal transmission
- Low end servers
- DASD (Direct Access Storage) systems/arrays
- Mates with 0.025(0.64)square

Electrical

- Current rating: 3.0 Amp AC,DC
- Contact resistance: 20mΩ max
- Insulation resistance: 1000MΩ min
- Dielection withstanding Voltage: 1000VAC RMS

Mechanical

- Operating Temperature: -55°C to 125°C

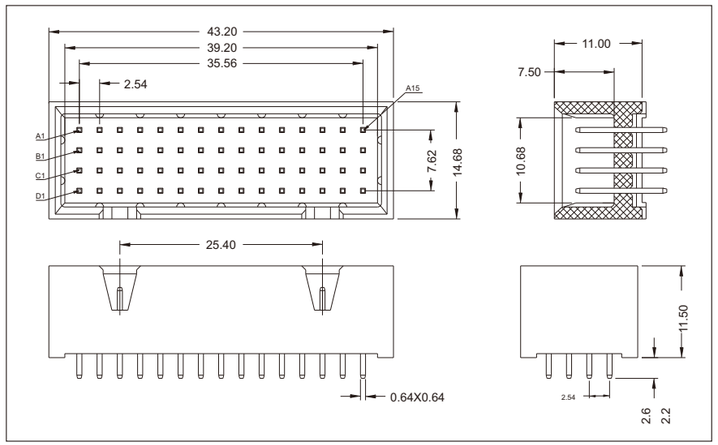

Notes: Please replace "X" with appropriate coding listed in the tables below

4 0 0 — H D 6 0 — 0 0 2 5 — 1 0 0

Contact Material

Code	Definition
2	Brass
7	Phosphor

Contact plating

Code	Definition	
	Termination	Contact
5	Tin plated	Au15u"
J	Tin plated	Au5u"

Insulator material

Code	Definition
1	LCP

Mark

Code	Definition
0	No mark
1	Nextron

Note: Dimensions are shown in Millimeters .Dimensions are for reference only.

Tel: +86-755-2605-2427 Fax: +86-755-2642-6035 Email:sales@jhjm.cc Internet: http://www.jhjm.cc

nextron®

420 Series

Hybrid connector for signal and power supply
Straight insert double row male seat 4+20pin M
Signal terminal spacing:2.54mm

Technical Data

Material

- Power Contacts: BRASS
- Plating: 1.27um/ 50 u" nickel tin plating
- Signal contacts: Copper Alloy
- Plating: 1.27um/ 50 u" nickel gold and tin plating
- Insulator body: Glass filled polyester UL 94V-0

Application and Features

Application: Power and data transmission, to provide data signal and power for equipment. Pluggable dial conforms to industrial control structure.
The connector is welded to the PCB through hole .
The recommended power pin is 2.5mm hole.
Signal pin is 2.0mm hole.

Electrical

- Current rating: Power pin 20Amp(Single pin)
  Signal pin 1Amp
- Contact resistance: Power pin 20mΩ max
  Signal pin 20mΩ max
- Insulation resistance: Power pin 1000MΩ min
  Signal pin 500MΩ min
- Dielection withstanding Voltage: Power pin 500V DC
  Signal pin 500V DC
  (1 minute)

Mechanical

- Operating Temperature: -40°C to 105°C
- Mating cycle: ≥300 mating cycle

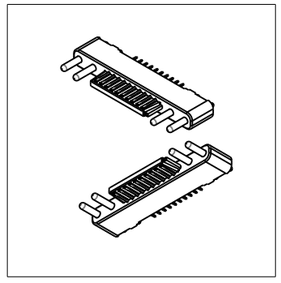

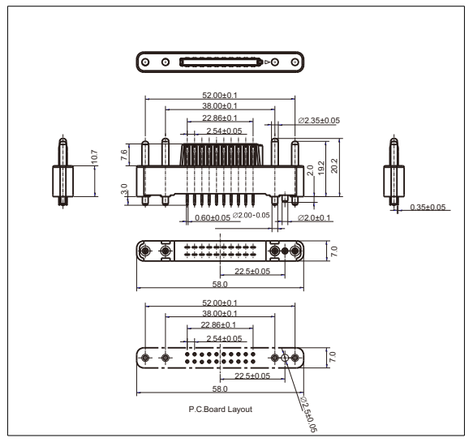

Notes: Please replace "X" with appropriate coding listed in the tables below

4 2 0 — 4 2 0 X — X X A M — 1 0 0

Type | Signal pin | DIP length | Signal pin Material | Contact Plated | Insulator material | Insulator color | Mark

Code	Definition
420F	4+20pin F
420P	4+20pin P

Code	Definition
1	Staight needle
2	Curved needle
5	SMT

Code	Definition
2	2.85mm
3	3.0mm

Code	Definition
2	Brass H65
7	Phosphor copper

Code	Definition
A	Gold 1u"/Light Tin

Code	Definition
1	LCP

Code	Definition
0	Black

Code	Definition
0	No
1	Nextron

Note: Dimensions are shown in Millimeters .Dimensions are for reference only.

nextron®
Tel: +86-755-2605-2427 Fax: +86-755-2642-6035 Email:sales@jhjm.cc Internet: http://www.jhjm.cc

nextron®

420 Series

Hybrid connector for signal and power supply
Double row seat Table stick welding(SMT) 4+20pin F
Signal terminal spacing:2.54mm

Technical Data

Material

- Power Contacts: BRASS
- Plating: 1.27um/ 50 u" nickel tin plating
- Signal contacts: Copper Alloy
- Plating: 1.27um/ 50 u" nickel gold and tin plating
- Insulator body: Glass filled polyester UL 94V-0

Application and Features

Application: Power and data transmission, to provide data signal and power for equipment. Pluggable dial conforms to industrial control structure.

The connector is welded to the PCB through hole and SMT.
The recommended power pin is 0.8mm hole.

Electrical

- Current rating: Power pin 20Amp(Single pin)
  Signal pin 1Amp
- Contact resistance: Power pin 20mΩ max
  Signal pin 20mΩ max
- Insulation resistance: Power pin 1000MΩ min
  Signal pin 500MΩ min
- Dielection withstanding Voltage: Power pin 500V DC
  Signal pin 500V DC
  (1 minute)

Mechanical

- Operating Temperature: - 40°C to 105°C
- Mating cycle: ≥300 mating cycle

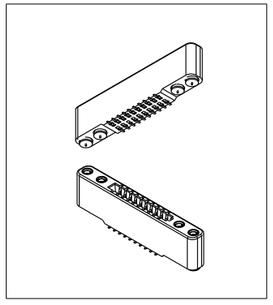

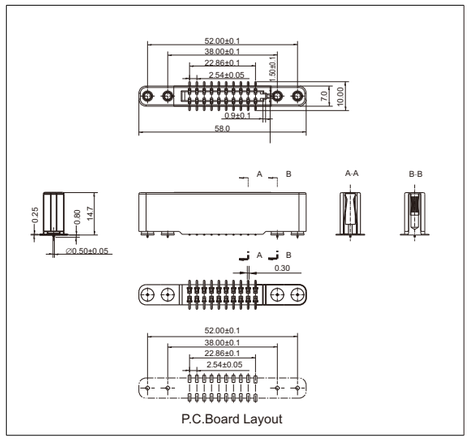

Notes: Please replace "X" with appropriate coding listed in the tables below

4 2 0 — 4 2 0 X — X X A M — 1 0 0

Type | Signal pin | DIP length | Signal pin Material | Contact Plated | Insulator material | Insulator color | Mark

Code	Definition
420F	4+20pin F
420P	4+20pin P

Code	Definition
1	Staight needle
2	Curved needle
5	SMT

Code	Definition
2	2.85mm
3	3.0mm

Code	Definition
2	Brass H65
7	Phosphor copper

Code	Definition
A	Gold 1u"/Light Tin

Code	Definition
1	LCP

Code	Definition
0	Black

Code	Definition
0	No
1	Nextron

Note: Dimensions are shown in Millimeters .Dimensions are for reference only.

nextron®
Tel: +86-755-2605-2427 Fax: +86-755-2642-6035 Email:sales@jhjm.cc Internet: http://www.jhjm.cc

432 Series

3.0mm pitch-wire to wire and wire to board connector
3.0mm pitch 180 Double row policy with feet
Solder tail tin or gold plated- Pin is crimp connected to PCB board
Pitch:3.0mm

Technical Data

Material

- Pin Phosphor: BRASS
- Plating: Tin plated: 1.25um/ 50 u" nickel 2.5um/100 u" Tin or gold plated
- Insulator body: (Black) Glass filled polyester Nylon 66 or HTN UL 94V-0

Electrical

- Rated voltage/current : 100V/5A
- Contact resistance: ≤20mΩ /Contact
- Insulation resistance: 1000MΩ min

Mechanical

- Mechanical life cycle: 200 Minimum
- Operating Temperature: -25°C to 105°C

Application and Features

- wire to board connector -Socket.
- The imported framework version provides easier access
- Use a high retention design to prevent connecting wires for easier access walkout during heavy vibration
- Pin design absolutely prevents 100% of
- Twist free construction

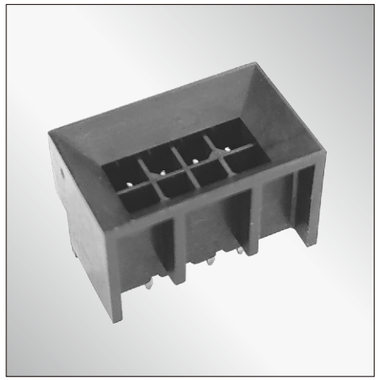

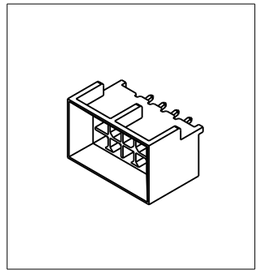

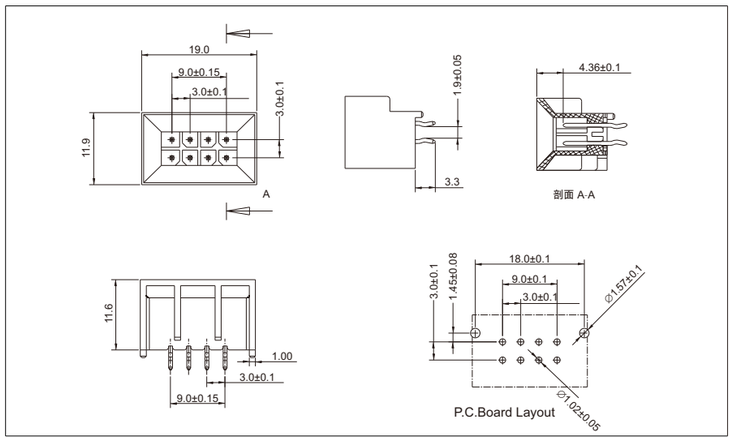

Notes: Please replace "X" with appropriate coding listed in the tables below

4 3 2 — X X X X — 0 0 X X — X X X — X

Model code

Code	Definition
0804	8pin power supply straight socket type D

PCB thickness

Code	Definition
0	without

connection type

Code	Definition
0	without

Terminal copper

Code	Definition
2	BRASS

Terminal plating

Code	Definition
2	Electric plating 3 u"
7	Bright tin

Insulator material

Code	Definition
2	PA66
H	HTN

Plastic color

Code	Definition
O	Black

Mark

Code	Definition
0	No mark
1	Nextron

Note: Dimensions are shown in Millimeters .Dimensions are for reference only.

Tel: +86-755-2605-2427 Fax: +86-755-2642-6035 Email:sales@jhjm.cc Internet: http://www.jhjm.cc

Din41612 Series

Din41612, "C" TYPE,MALE,RIGHT ANGLE
Pitch:2.54mm/0.10"

Technical Data

Material

- Contact: Copper Alloy
- Plating: (Contact) 1.25um/ 50 u" nickel gold and tin plating see table below
- Boardlock: BRASS
- Plating: (Boardlock) 1.25um/ 50 u" nickel Ni or tin plating
- Insulator body: Glass filled polyester UL 94V-0

Electrical

- Current rating: 1.5Amp
- Contact resistance: 30mΩ max
- Insulation resistance: 1000MΩ min
- Dielection withstanding Voltage: 1000VAC RMS

Mechanical

- Operating Temperature: -40°C to 105°C
- Mating cycle: ＞400 mating cycle

Applications and Features

- Input / Output Connector
- Available in 32, 64 and 96 positions Other pin bits below 96 positions can be customized
- Available in plugs and receptacles
- Available molding insulation with cable after soldering
- Wave soldering process is adopted

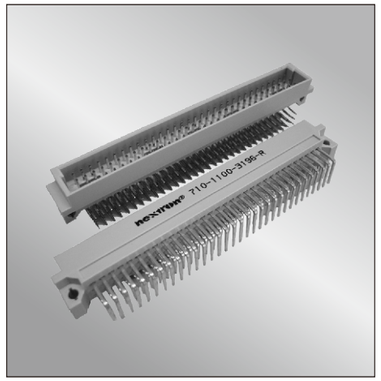

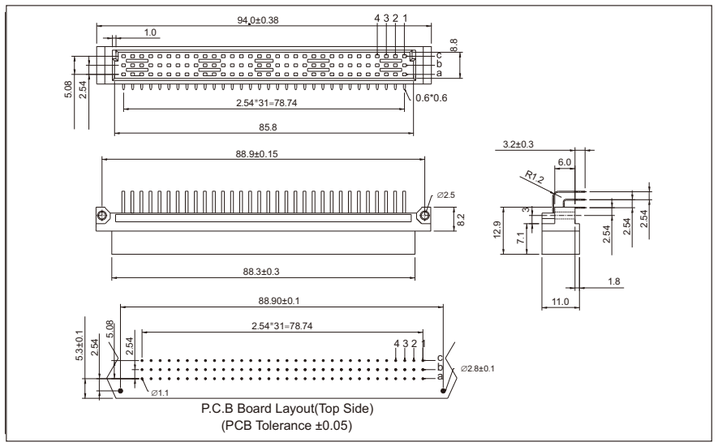

Notes: Please replace "X" with appropriate coding listed in the tables below

7 1 0 — 1 X 0 0 — X X X X — X X X

Rows of Plastic

Code	Definition
1	3 Rows
2	2 Rows

Housing Type

Code	Definition
1	Male
3	Female

Contact Plated

Code	Contact Area
1	Gold 1u"/ Light Tin
3	Gold 3u"/ Light Tin

Dim"D" & Pin deficiency

Code	Definition
31	DIP=3.2mm Right Angle Male

Number of contacts

Code	Definition
32	32Pin
64	64Pin
96	96Pin
XX	xxPin

PIN Type

Code	Definition
R	Right Angle
S	Straight

Position Harpoon

Code	Definition
N	With Harpoon
Blank	No Harpoon

Mark

Code	Definition
0	No mark
Blank	Nextron mark

Note: Dimensions are shown in Millimeters .Dimensions are for reference only.

Tel: +86-755-2605-2427 Fax: +86-755-2642-6035 Email:sales@jhjm.cc Internet: http://www.jhjm.cc

Din41612, "C" TYPE,FEMALE,STRAIGHT
Pitch:2.54mm/0.10"

Din41612 Series

Technical Data

Material

- Contact: Copper Alloy
- Plating: (Contact) 1.25um/ 50 u" nickel gold and tin plating see table below
- Boardlock: BRASS
- Plating: (Boardlock) 1.25um/ 50 u" nickel Ni or tin plating
- Insulator body: Glass filled polyester UL 94V-0

Electrical

- Current rating: 1.5Amp
- Contact resistance: 30mΩ max
- Insulation resistance: 1000MΩ min
- Dielection withstanding Voltage: 1000VAC RMS

Mechanical

- Operating Temperature: -40°C to 105°C
- Mating cycle: ＞400 mating cycle

Applications and Features

- Input / Output Connector
- Available in 32, 64 and 96 positions Other pin bits below 96 positions can be customized
- Available in plugs and receptacles
- Available molding insulation with cable after soldering
- Wave soldering process is adopted

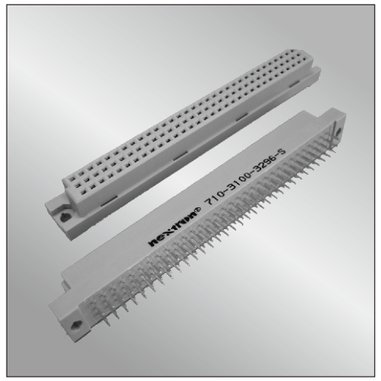

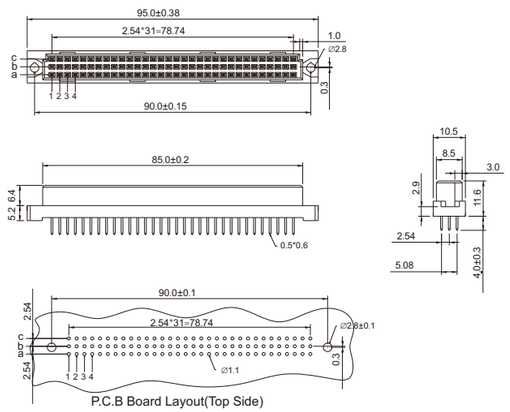

P.C.B Board Layout(Top Side)
(PCB Tolerance ±0.05)

Notes: Please replace "X" with appropriate coding listed in the tables below

7 1 0 — 3 X 0 0 — X X X X — X X X

Rows of Plastic

Code	Definition
1	3 Rows
2	2 Rows

Housing Type

Code	Definition
1	Male
3	Female

Contact Plated

Code	Contact Area
1	Gold 1u"/ Light Tin
3	Gold 3u"/ Light Tin

Dim"D" & Pin deficiency

Code	Definition
32	DIP=4.0mm Straight Female

Number of contacts

Code	Definition
32	32Pin
64	64Pin
96	96Pin
XX	xxPin

PIN Type

Code	Definition
R	Right Angle
S	Straight

Position Harpoon

Code	Definition
N	With Harpoon
Blank	No Harpoon

Mark

Code	Definition
0	No mark
Blank	Nextron mark

Note: Dimensions are shown in Millimeters .Dimensions are for reference only.

Tel: +86-755-2605-2427 Fax: +86-755-2642-6035 Email:sales@jhjm.cc Internet: http://www.jhjm.cc

Din41612, "C" TYPE,MALE,RIGHT ANGLE
Pitch:2.54mm/0.10"

Din41612 Series

Technical Data

Material

- Contact: Copper Alloy
- Plating: (Contact) 1.25um/ 50 u" nickel gold and tin plating see table below
- Boardlock: BRASS
- Plating: (Boardlock) 1.25um/ 50 u" nickel Ni or tin plating
- Insulator body: Glass filled polyester UL 94V-0

Electrical

- Current rating: 1.5Amp
- Contact resistance: 30mΩ max
- Insulation resistance: 1000MΩ min
- Dielection withstanding Voltage: 1000VAC RMS

Mechanical

- Operating Temperature: -40°C to 105°C
- Mating cycle: ＞400 mating cycle

Applications and Features

- Input / Output Connector
- Available in 16, 32 and 48 positions Other pin bits below 48 positions can be customized
- Available in plugs and receptacles
- Available molding insulation with cable after soldering
- Wave soldering process is adopted

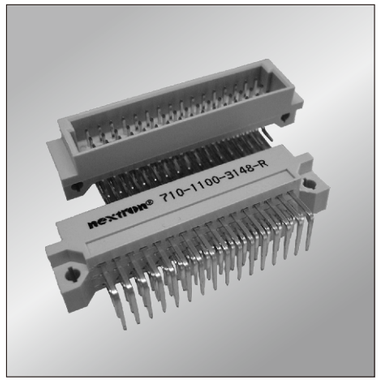

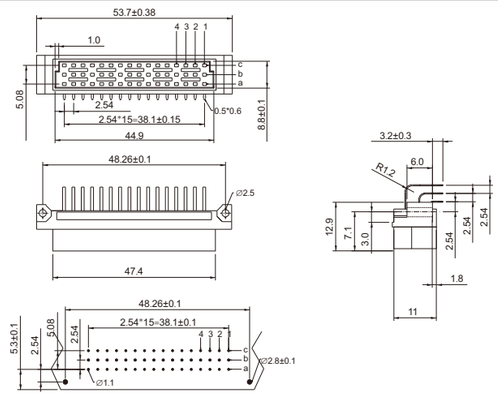

P.C.B Board Layout(Top Side)
(PCB Tolerance ±0.05)

Notes: Please replace "X" with appropriate coding listed in the tables below

7 1 0 — 1 X 0 0 — X X X X — X X X

Rows of Plastic

Code	Definition
1	3 Rows
2	2 Rows

Housing Type

Code	Definition
1	Male
3	Female

Contact Plated

Code	Contact Area
1	Gold 1u"/ Light Tin
3	Gold 3u"/ Light Tin

Dim"D" & Pin deficiency

Code	Definition
31	DIP=3.2mm Right Angle Male

Number of contacts

Code	Definition
16	16Pin
32	32Pin
48	48Pin
XX	xxPin

PIN Type

Code	Definition
R	Right Angle
S	Straight

Position Harpoon

Code	Definition
N	With Harpoon
Blank	No Harpoon

Mark

Code	Definition
0	No mark
Blank	Nextron mark

Note: Dimensions are shown in Millimeters .Dimensions are for reference only.

Tel: +86-755-2605-2427 Fax: +86-755-2642-6035 Email:sales@jhjm.cc Internet: http://www.jhjm.cc

nextron®

Din41612 Series

Din41612, "C" TYPE,FEMALE,STRAIGHT
Pitch:2.54mm/0.10"

Technical Data

Material

- Contact: Copper Alloy
- Plating: (Contact) 1.25um/ 50 u" nickel gold and tin plating see table below
- Boardlock: BRASS
- Plating: (Boardlock) 1.25um/ 50 u" nickel Ni or tin plating
- Insulator body: Glass filled polyester UL 94V-0

Electrical

- Current rating: 2.0Amp
- Contact resistance: 30mΩ max
- Insulation resistance: 1000MΩ min
- Dielection withstanding Voltage: 1000VAC RMS

Mechanical

- Operating Temperature: -40°C to 105°C
- Mating cycle: ＞400 mating cycle

Applications and Features

- Input / Output Connector
- Available in 16, 32 and 48 positions Other pin bits below 48 positions can be customized
- Available in plugs and receptacles
- Available molding insulation with cable after soldering
- Wave soldering process is adopted

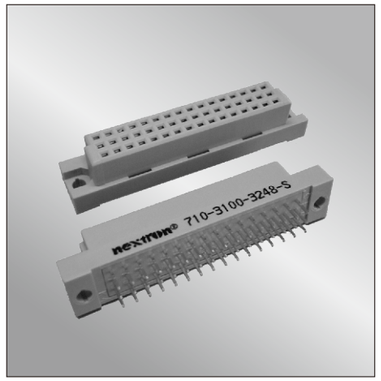

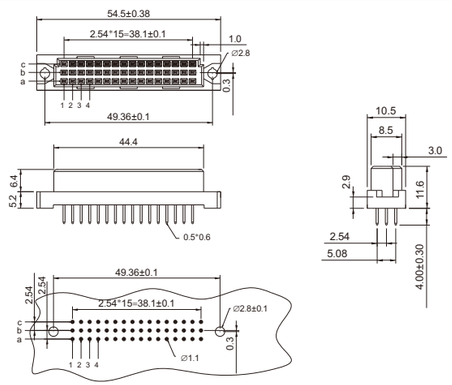

P.C.B Board Layout(Top Side)
(PCB Tolerance ±0.05)

Notes: Please replace "X" with appropriate coding listed in the tables below

7 1 0 — 3 X 0 0 — X X X X — X X X

Rows of Plastic

Code	Definition
1	3 Rows
2	2 Rows

Housing Type

Code	Definition
1	Male
3	Female

Contact Plated

Code	Contact Area
1	Gold 1u"/ Light Tin
3	Gold 3u"/ Light Tin

Dim"D" & Pin deficiency

Code	Definition
32	DIP=4.0mm Straight Female

Number of contacts

Code	Definition
16	16Pin
32	32Pin
48	48Pin
XX	xxPin

PIN Type

Code	Definition
R	Right Angle
S	Straight

Position Harpoon

Code	Definition
N	With Harpoon
Blank	No Harpoon

Mark

Code	Definition
0	No mark
Blank	Nextron mark

Note: Dimensions are shown in Millimeters .Dimensions are for reference only.

nextron®
Tel: +86-755-2605-2427 Fax: +86-755-2642-6035 Email:sales@jhjm.cc Internet: http://www.jhjm.cc

nextron®

Din41612 Series

Din41612, "R" TYPE,MALE,STRAIGHT
Pitch:2.54mm/0.10"

Technical Data

Material

- Contact: Copper Alloy
- Plating: (Contact) 1.25um/ 50 u" nickel gold and tin plating see table below
- Boardlock: BRASS
- Plating: (Boardlock) 1.25um/ 50 u" nickel Ni or tin plating
- Insulator body: Glass filled polyester UL 94V-0

Electrical

- Current rating: 2.0Amp
- Contact resistance: 30mΩ max
- Insulation resistance: 1000MΩ min
- Dielection withstanding Voltage: 1000VAC RMS

Mechanical

- Operating Temperature: -40°C to 105°C
- Mating cycle: ＞400 mating cycle

Applications and Features

- Input / Output Connector
- Available in 32, 64 and 96 positions Other pin bits below 96 positions can be customized
- Available in plugs and receptacles
- Available molding insulation with cable after soldering
- Wave soldering process is adopted

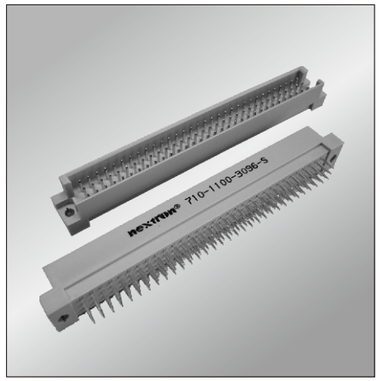

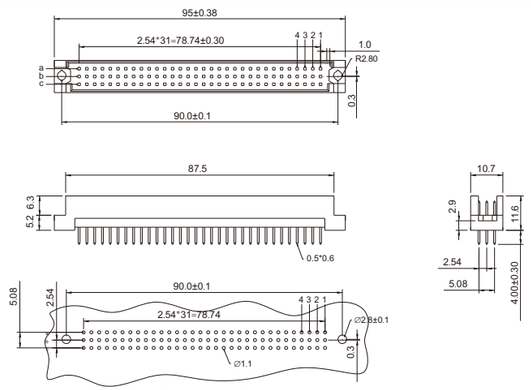

P.C.B Board Layout(Top Side)
(PCB Tolerance ±0.05

Notes: Please replace "X" with appropriate coding listed in the tables below

7 1 0 — 1 X 0 0 — X X X X — X X X

Rows of Plastic

Code	Definition
1	3 Rows
2	2 Rows

Housing Type

Code	Definition
1	Male
3	Female

Contact Plated

Code	Contact Area
1	Gold 1u"/ Light Tin
3	Gold 3u"/ Light Tin

Dim"D" & Pin deficiency

Code	Definition
30	DIP=4.0mm Straight Male

Number of contacts

Code	Definition
32	32Pin
64	64Pin
96	96Pin
XX	xxPin

PIN Type

Code	Definition
R	Right Angle
S	Straight

Position Harpoon

Code	Definition
N	With Harpoon
Blank	No Harpoon

Mark

Code	Definition
0	No mark
Blank	Nextron mark

Note: Dimensions are shown in Millimeters .Dimensions are for reference only.

nextron®
Tel: +86-755-2605-2427 Fax: +86-755-2642-6035 Email:sales@jhjm.cc Internet: http://www.jhjm.cc

nextron®

Din41612 Series

Din41612, "R" TYPE,FEMALE,Right Angle
Pitch:2.54mm/0.10"

Technical Data

Material

- Contact: Copper Alloy
- Plating: (Contact) 1.25um/ 50 u" nickel gold and tin plating see table below
- Boardlock: BRASS
- Plating: (Boardlock) 1.25um/ 50 u" nickel Ni or tin plating
- Insulator body: Glass filled polyester UL 94V-0

Electrical

- Current rating: 1.5Amp
- Contact resistance: 30mΩ max
- Insulation resistance: 1000MΩ min
- Dielection withstanding Voltage: 1000VAC RMS

Mechanical

- Operating Temperature: -40°C to 105°C
- Mating cycle: ＞400 mating cycle

Applications and Features

- Input / Output Connector
- Available in 32, 64 and 96 positions Other pin bits below 96 positions can be customized
- Available in plugs and receptacles
- Available molding insulation with cable after soldering
- Wave soldering process is adopted

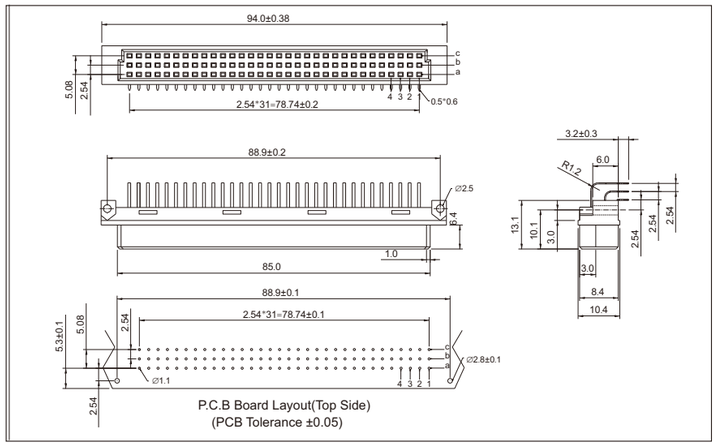

Notes: Please replace "X" with appropriate coding listed in the tables below

7 1 0 — 3 X 0 0 — X X X X — X X X

Rows of Plastic

Code	Definition
1	3 Rows
2	2 Rows

Housing Type

Code	Definition
1	Male
3	Female

Contact Plated

Code	Contact Area
1	Gold 1u"/ Light Tin
3	Gold 3u"/ Light Tin

Dim"D" & Pin deficiency

Code	Definition
13	DIP=3.2mm Right Angle Female

Number of contacts

Code	Definition
32	32Pin
64	64Pin
96	96Pin
XX	xxPin

PIN Type

Code	Definition
R	Right Angle
S	Straight

Position Harpoon

Code	Definition
N	With Harpoon
Blank	No Harpoon

Mark

Code	Definition
0	No mark
Blank	Nextron mark

Note: Dimensions are shown in Millimeters .Dimensions are for reference only.

nextron®
Tel: +86-755-2605-2427 Fax: +86-755-2642-6035 Email:sales@jhjm.cc Internet: http://www.jhjm.cc

nextron®

Din41612 Series

Din41612, "R" TYPE,MALE,STRAIGHT
Pitch:2.54mm/0.10"

Technical Data

Material

- Contact: Copper Alloy
- Plating: (Contact) 1.25um/ 50 u" nickel gold and tin plating see table below
- Boardlock: BRASS
- Plating: (Boardlock) 1.25um/ 50 u" nickel Ni or tin plating
- Insulator body: Glass filled polyester UL 94V-0

Electrical

- Current rating: 2.0Amp
- Contact resistance: 30mΩ max
- Insulation resistance: 1000MΩ min
- Dielection withstanding Voltage: 1000VAC RMS

Mechanical

- Operating Temperature: -40°C to 105°C
- Mating cycle: ＞400 mating cycle

Applications and Features

- Input / Output Connector
- Available in 16, 32 and 48 positions Other pin bits below 48 positions can be customized
- Available in plugs and receptacles
- Available molding insulation with cable after soldering
- Wave soldering process is adopted

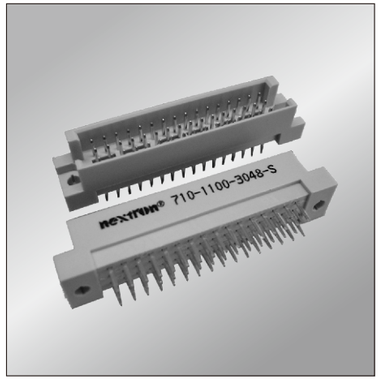

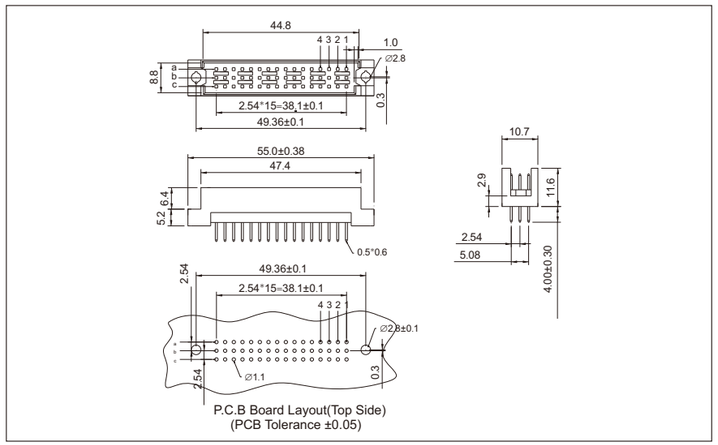

Notes: Please replace "X" with appropriate coding listed in the tables below

7 1 0 — 1 X 0 0 — X X X X — X X X

Rows of Plastic

Code	Definition
1	3 Rows
2	2 Rows

Housing Type

Code	Definition
1	Male
3	Female

Contact Plated

Code	Contact Area
1	Gold 1u"/ Light Tin
3	Gold 3u"/ Light Tin

Dim"D" & Pin deficiency

Code	Definition
30	DIP=4.0mm Straight Male

Number of contacts

Code	Definition
16	32Pin
32	64Pin
48	96Pin
XX	xxPin

PIN Type

Code	Definition
R	Right Angle
S	Straight

Position Harpoon

Code	Definition
N	With Harpoon
Blank	No Harpoon

Mark

Code	Definition
0	No mark
Blank	Nextron mark

Note: Dimensions are shown in Millimeters .Dimensions are for reference only.

nextron®
Tel: +86-755-2605-2427 Fax: +86-755-2642-6035 Email:sales@jhjm.cc Internet: http://www.jhjm.cc

Din41612, "R" TYPE,FEMALE,Right Angle
Pitch:2.54mm/0.10"

Din41612 Series

Technical Data

Material

- Contact: Copper Alloy
- Plating: (Contact) 1.25um/ 50 u" nickel gold and tin plating see table below
- Boardlock: BRASS
- Plating: (Boardlock) 1.25um/ 50 u" nickel Ni or tin plating
- Insulator body: Glass filled polyester UL 94V-0

Electrical

- Current rating: 1.5Amp
- Contact resistance: 30mΩ max
- Insulation resistance: 1000MΩ min
- Dielection withstanding Voltage: 1000VAC RMS

Mechanical

- Operating Temperature: -40°C to 105°C
- Mating cycle: ＞400 mating cycle

Applications and Features

- Input / Output Connector
- Available in 16, 32 and 48 positions Other pin bits below 48 positions can be customized
- Available in plugs and receptacles
- Available molding insulation with cable after soldering
- Wave soldering process is adopted

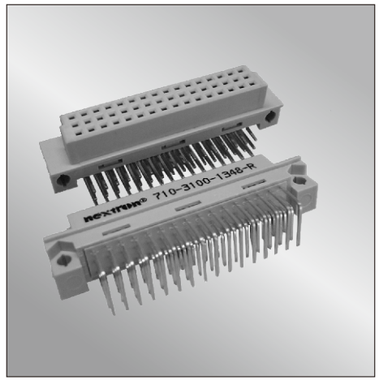

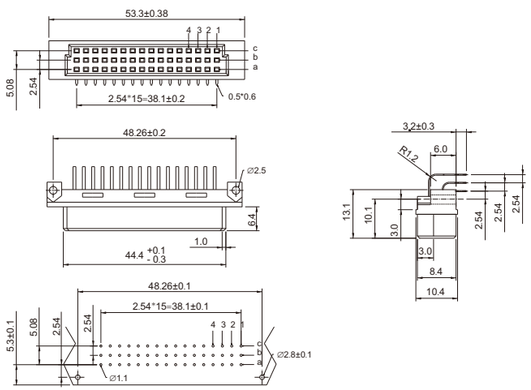

P.C.B Board Layout(Top Side)
(PCB Tolerance ±0.05)

Notes: Please replace "X" with appropriate coding listed in the tables below

7 1 0 — 3 X 0 0 — X X X X — X X X

Rows of Plastic

Code	Definition
1	3 Rows
2	2 Rows

Housing Type

Code	Definition
1	Male
3	Female

Contact Plated

Code	Contact Area
1	Gold 1u"/ Light Tin
3	Gold 3u"/ Light Tin

Dim"D" & Pin deficiency

Code	Definition
13	DIP=3.2mm Right Angle Female

Number of contacts

Code	Definition
16	16Pin
32	32Pin
48	48Pin
XX	xxPin

PIN Type

Code	Definition
R	Right Angle
S	Straight

Position Harpoon

Code	Definition
N	With Harpoon
Blank	No Harpoon

Mark

Code	Definition
0	No mark
Blank	Nextron mark

Note: Dimensions are shown in Millimeters .Dimensions are for reference only.

nextron
Tel: +86-755-2605-2427 Fax: +86-755-2642-6035 Email:sales@jhjm.cc Internet: http://www.jhjm.cc

Din41612, "B" TYPE,MALE,RIGHT ANGLE
Pitch:2.54mm/0.10"

Din41612 Series

Technical Data

Material

- Contact: Copper Alloy
- Plating: (Contact) 1.25um/ 50 u" nickel gold and tin plating see table below
- Boardlock: BRASS
- Plating: (Boardlock) 1.25um/ 50 u" nickel Ni or tin plating
- Insulator body: Glass filled polyester UL 94V-0

Electrical

- Current rating: 1.5Amp
- Contact resistance: 30mΩ max
- Insulation resistance: 1000MΩ min
- Dielection withstanding Voltage: 1000VAC RMS

Mechanical

- Operating Temperature: -40°C to 105°C
- Mating cycle: ＞400 mating cycle

Applications and Features

- Input / Output Connector
- Available in 16, 32 and 64 positions Other pin bits below 64 positions can be customized
- Available in plugs and receptacles
- Available molding insulation with cable after soldering
- Wave soldering process is adopted

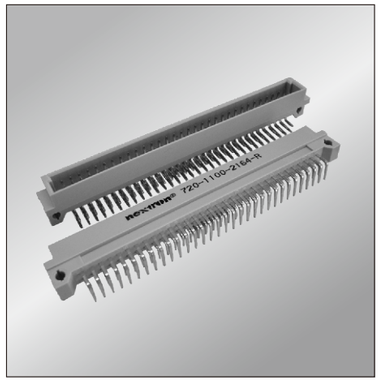

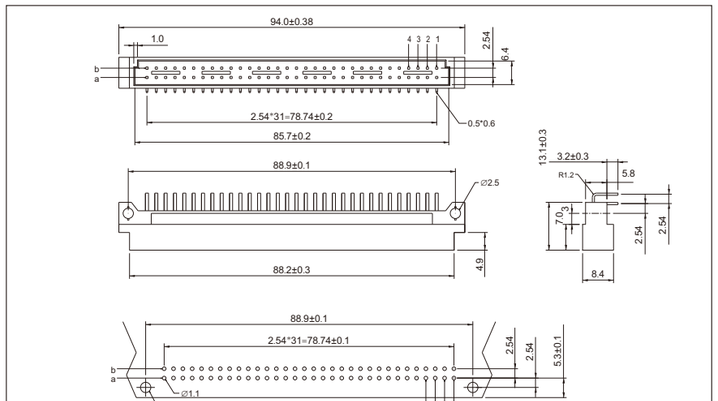

P.C.B Board Layout(Top Side)
(PCB Tolerance ±0.05)

Notes: Please replace "X" with appropriate coding listed in the tables below

7 2 0 — 1 X 0 0 — X X X X — X X X

Rows of Plastic

Code	Definition
1	3 Rows
2	2 Rows

Housing Type

Code	Definition
1	Male
3	Female

Contact Plated

Code	Contact Area
1	Gold 1u"/ Light Tin
3	Gold 3u"/ Light Tin

Dim"D" & Pin deficiency

Code	Definition
21	DIP=3.2mm Right Angle Male

Number of contacts

Code	Definition
32	32Pin
64	64Pin
XX	xxPin

PIN Type

Code	Definition
R	Right Angle
S	Straight

Position Harpoon

Code	Definition
N	With Harpoon
Blank	No Harpoon

Mark

Code	Definition
0	No mark
Blank	Nextron mark

Note: Dimensions are shown in Millimeters .Dimensions are for reference only.

nextron
Tel: +86-755-2605-2427 Fax: +86-755-2642-6035 Email:sales@jhjm.cc Internet: http://www.jhjm.cc

nextron®

Din41612, "B" TYPE,FEMALE,STRAIGHT
Pitch:2.54mm/0.10"

Din41612 Series

Technical Data

Material

- Contact: Copper Alloy
- Plating: (Contact) 1.25um/ 50 u" nickel gold and tin plating see table below
- Boardlock: BRASS
- Plating: (Boardlock) 1.25um/ 50 u" nickel Ni or tin plating
- Insulator body: Glass filled polyester UL 94V-0

Applications and Features

- Input / Output Connector
- Available in 16, 32 and 64 positions Other pin bits below 64 positions can be customized
- Available in plugs and receptacles
- Available molding insulation with cable after soldering
- Wave soldering process is adopted

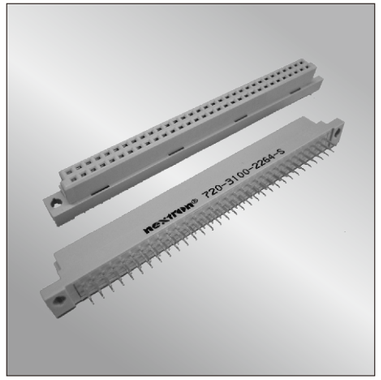

Electrical

- Current rating: 1.5Amp
- Contact resistance: 30mΩ max
- Insulation resistance: 1000MΩ min
- Dielection withstanding Voltage: 1000VAC RMS

Mechanical

- Operating Temperature: -40°C to 105°C
- Mating cycle: ＞400 mating cycle

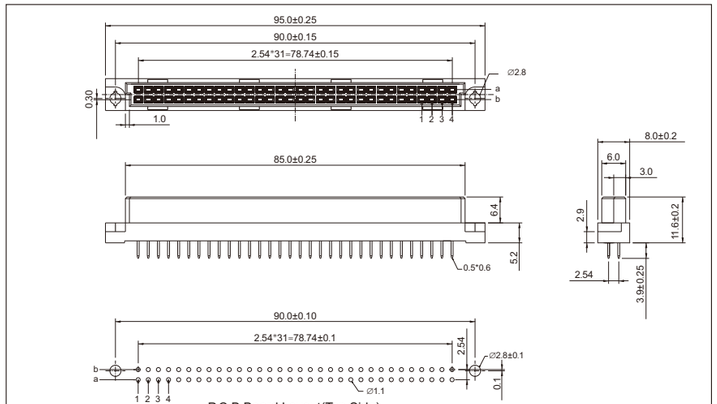

P.C.B Board Layout(Top Side)
(PCB Tolerance ±0.05)

Notes: Please replace "X" with appropriate coding listed in the tables below

7 2 0 — 3 X 0 0 — X X X X — X X X

Rows of Plastic

Code	Definition
1	3 Rows
2	2 Rows

Housing Type

Code	Definition
1	Male
3	Female

Contact Plated

Code	Contact Area
1	Gold 1u"/ Light Tin
3	Gold 3u"/ Light Tin

Dim"D" & Pin deficiency

Code	Definition
22	DIP=3.9mm Straight Female

Number of contacts

Code	Definition
32	32Pin
64	64Pin
XX	xxPin

PIN Type

Code	Definition
R	Right Angle
S	Straight

Position Harpoon

Code	Definition
N	With Harpoon
Blank	No Harpoon

Mark

Code	Definition
0	No mark
Blank	Nextron mark

Note: Dimensions are shown in Millimeters .Dimensions are for reference only.

nextron®

Tel: +86-755-2605-2427 Fax: +86-755-2642-6035 Email:sales@jhjm.cc Internet: http://www.jhjm.cc

nextron®

Din41612, "B" TYPE,MALE,RIGHT ANGLE
Pitch:2.54mm/0.10"

Din41612 Series

Technical Data

Material

- Contact: Copper Alloy
- Plating: (Contact) 1.25um/ 50 u" nickel gold and tin plating see table below
- Boardlock: BRASS
- Plating: (Boardlock) 1.25um/ 50 u" nickel Ni or tin plating
- Insulator body: Glass filled polyester UL 94V-0

Applications and Features

- Input / Output Connector
- Available in 16, 32 positions Other pin bits below 32 positions can be customized
- Available in plugs and receptacles
- Available molding insulation with cable after soldering
- Wave soldering process is adopted

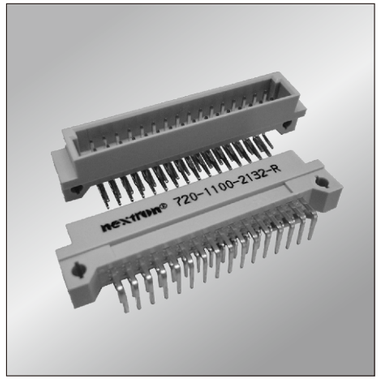

Electrical

- Current rating: 1.5Amp
- Contact resistance: 30mΩ max
- Insulation resistance: 1000MΩ min
- Dielection withstanding Voltage: 1000VAC RMS

Mechanical

- Operating Temperature: -40°C to 105°C
- Mating cycle: ＞400 mating cycle

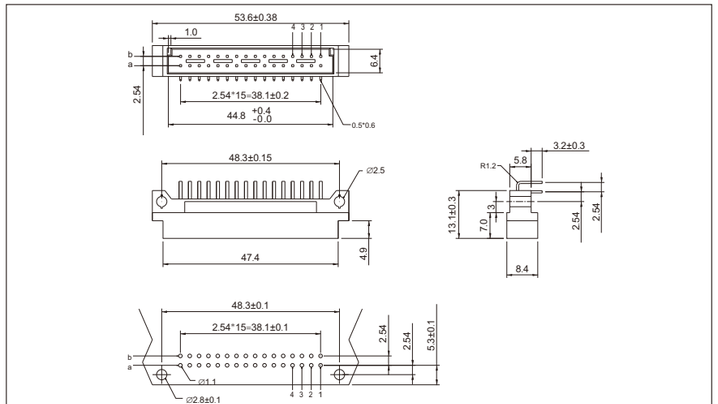

P.C.B Board Layout(Top Side)
(PCB Tolerance ±0.05)

Notes: Please replace "X" with appropriate coding listed in the tables below

7 2 0 — 1 X 0 0 — X X X X — X X X

Rows of Plastic

Code	Definition
1	3 Rows
2	2 Rows

Housing Type

Code	Definition
1	Male
3	Female

Contact Plated

Code	Contact Area
1	Gold 1u"/ Light Tin
3	Gold 3u"/ Light Tin

Dim"D" & Pin deficiency

Code	Definition
21	DIP=3.2mm Right Angle Male

Number of contacts

Code	Definition
16	16Pin
32	32Pin
XX	xxPin

PIN Type

Code	Definition
R	Right Angle
S	Straight

Position Harpoon

Code	Definition
N	With Harpoon
Blank	No Harpoon

Mark

Code	Definition
0	No mark
Blank	Nextron mark

Note: Dimensions are shown in Millimeters .Dimensions are for reference only.

nextron®

Tel: +86-755-2605-2427 Fax: +86-755-2642-6035 Email:sales@jhjm.cc Internet: http://www.jhjm.cc

nextron®

Din41612, "B" TYPE,FEMALE,STRAIGHT

Din41612 Series

Pitch:2.54mm/0.10"

Technical Data

Material

- Contact: Copper Alloy
- Plating: (Contact) 1.25um/ 50 u" nickel gold and tin plating see table below
- Boardlock: BRASS
- Plating: (Boardlock) 1.25um/ 50 u" nickel Ni or tin plating
- Insulator body: Glass filled polyester UL 94V-0

Electrical

- Current rating: 1.5Amp
- Contact resistance: 30mΩ max
- Insulation resistance: 1000MΩ min
- Dielection withstanding Voltage: 1000VAC RMS

Mechanical

- Operating Temperature: -40°C to 105°C
- Mating cycle: ＞400 mating cycle

Applications and Features

Application and Features

- Input / Output Connector
- Available in 16, 32 positions Other pin bits below 32 positions can be customized
- Available in plugs and receptacles
- Available molding insulation with cable after soldering
- Wave soldering process is adopted

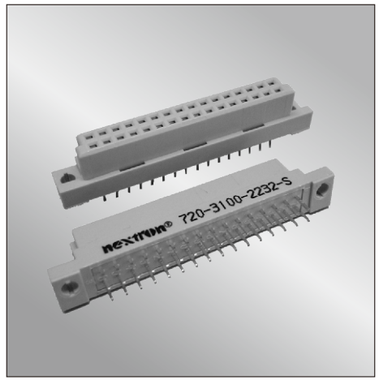

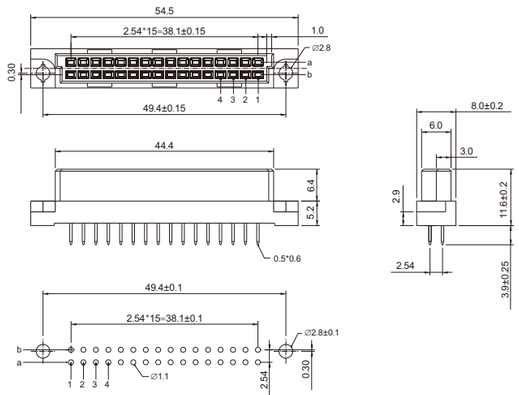

P.C.B Board Layout(Top Side)
(PCB Tolerance ±0.05)

Notes: Please replace "X" with appropriate coding listed in the tables below

7 2 0 — 3 X 0 0 — X X X X — X X X

Rows of Plastic

Code	Definition
1	3 Rows
2	2 Rows

Housing Type

Code	Definition
1	Male
3	Female

Contact Plated

Code	Contact Area
1	Gold 1u"/ Light Tin
3	Gold 3u"/ Light Tin

Dim"D" & Pin deficiency

Code	Definition
22	DIP=3.9mm Straight Female

Number of contacts

Code	Definition
16	16Pin
32	32Pin
XX	xxPin

PIN Type

Code	Definition
R	Right Angle
S	Straight

Position Harpoon

Code	Definition
N	With Harpoon
Blank	No Harpoon

Mark

Code	Definition
0	No mark
Blank	Nextron mark

Note: Dimensions are shown in Millimeters .Dimensions are for reference only.

nextron®

Tel: +86-755-2605-2427 Fax: +86-755-2642-6035 Email:sales@jhjm.cc Internet: http://www.jhjm.cc

nextron®

Din41612, "Q" TYPE,MALE,RIGHT ANGLE

Din41612 Series

Pitch:2.54mm/0.10"

Technical Data

Material

- Contact: Copper Alloy
- Plating: (Contact) 1.25um/ 50 u" nickel gold and tin plating see table below
- Boardlock: BRASS
- Plating: (Boardlock) 1.25um/ 50 u" nickel Ni or tin plating
- Insulator body: Glass filled polyester UL 94V-0

Electrical

- Current rating: 1.5Amp
- Contact resistance: 30mΩ max
- Insulation resistance: 1000MΩ min
- Dielection withstanding Voltage: 1000VAC RMS

Mechanical

- Operating Temperature: -40°C to 105°C
- Mating cycle: ＞400 mating cycle

Applications and Features

- Input / Output Connector
- Available in 16, 32 and 64 positions Other pin bits below 64 positions can be customized
- Available in plugs and receptacles
- Available molding insulation with cable after soldering
- Wave soldering process is adopted

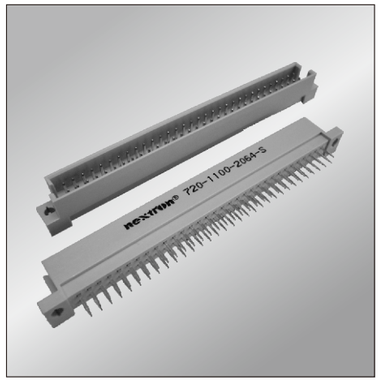

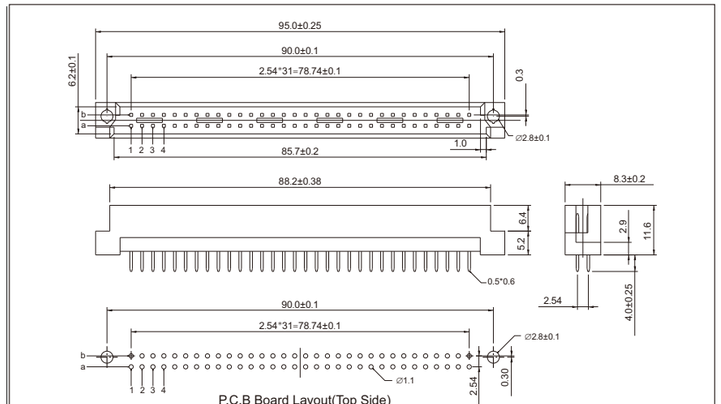

P.C.B Board Layout(Top Side)
(PCB Tolerance ±0.05)

Notes: Please replace "X" with appropriate coding listed in the tables below

7 2 0 — 1 X 0 0 — X X X X — X X X

Rows of Plastic

Code	Definition
1	3 Rows
2	2 Rows

Housing Type

Code	Definition
1	Male
3	Female

Contact Plated

Code	Contact Area
1	Gold 1u"/ Light Tin
3	Gold 3u"/ Light Tin

Dim"D" & Pin deficiency

Code	Definition
20	DIP=4.0mm Straight Male

Number of contacts

Code	Definition
32	32Pin
64	64Pin
XX	xxPin

PIN Type

Code	Definition
R	Right Angle
S	Straight

Position Harpoon

Code	Definition
N	With Harpoon
Blank	No Harpoon

Mark

Code	Definition
0	No mark
Blank	Nextron mark

Note: Dimensions are shown in Millimeters .Dimensions are for reference only.

nextron®

Tel: +86-755-2605-2427 Fax: +86-755-2642-6035 Email:sales@jhjm.cc Internet: http://www.jhjm.cc

nextron®

Din41612, "Q" TYPE,FEMALE,STRAIGHT

Din41612 Series

Pitch:2.54mm/0.10"

Technical Data

Material

- Contact: Copper Alloy
- Plating: (Contact) 1.25um/ 50 u" nickel gold and tin plating see table below
- Boardlock: BRASS
- Plating: (Boardlock) 1.25um/ 50 u" nickel Ni or tin plating
- Insulator body: Glass filled polyester UL 94V-0

Electrical

- Current rating: 1.5Amp
- Contact resistance: 30mΩ max
- Insulation resistance: 1000MΩ min
- Dielection withstanding Voltage: 1000VAC RMS

Mechanical

- Operating Temperature: -40°C to 105°C
- Mating cycle: ＞400 mating cycle

Applications and Features

- Input / Output Connector
- Available in 16, 32 and 64 positions Other pin bits below 64 positions can be customized
- Available in plugs and receptacles
- Available molding insulation with cable after soldering
- Wave soldering process is adopted

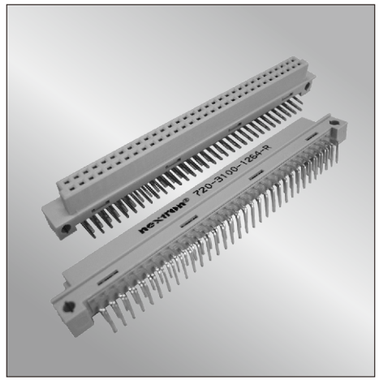

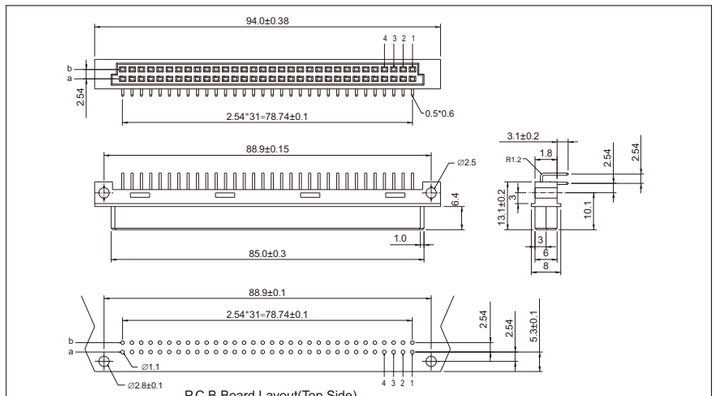

Notes: Please replace "X" with appropriate coding listed in the tables below

7 2 0 — 3 X 0 0 — X X X X — X X X

Rows of Plastic

Code	Definition
1	3 Rows
2	2 Rows

Housing Type

Code	Definition
1	Male
3	Female

Contact Plated

Code	Contact Area
1	Gold 1u"/ Light Tin
3	Gold 3u"/ Light Tin

Dim"D" & Pin deficiency

Code	Definition
12	DIP=3.1mm Right Angle Female

Number of contacts

Code	Definition
32	32Pin
64	64Pin
XX	xxPin

PIN Type

Code	Definition
R	Right Angle
S	Straight

Position Harpoon

Code	Definition
N	With Harpoon
Blank	No Harpoon

Mark

Code	Definition
0	No mark
Blank	Nextron mark

Note: Dimensions are shown in Millimeters .Dimensions are for reference only.

nextron®

Tel: +86-755-2605-2427 Fax: +86-755-2642-6035 Email:sales@jhjm.cc Internet: http://www.jhjm.cc

nextron®

Din41612, "Q" TYPE,MALE,RIGHT ANGLE

Din41612 Series

Pitch:2.54mm/0.10"

Technical Data

Material

- Contact: Copper Alloy
- Plating: (Contact) 1.25um/ 50 u" nickel gold and tin plating see table below
- Boardlock: BRASS
- Plating: (Boardlock) 1.25um/ 50 u" nickel Ni or tin plating
- Insulator body: Glass filled polyester UL 94V-0

Electrical

- Current rating: 1.5Amp
- Contact resistance: 30mΩ max
- Insulation resistance: 1000MΩ min
- Dielection withstanding Voltage: 1000VAC RMS

Mechanical

- Operating Temperature: -40°C to 105°C
- Mating cycle: ＞400 mating cycle

Applications and Features

- Input / Output Connector
- Available in 16, 32 positions Other pin bits below 32 positions can be customized
- Available in plugs and receptacles
- Available molding insulation with cable after soldering
- Wave soldering process is adopted

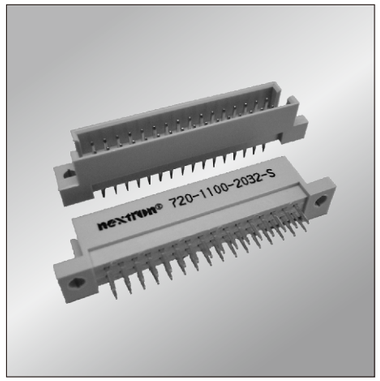

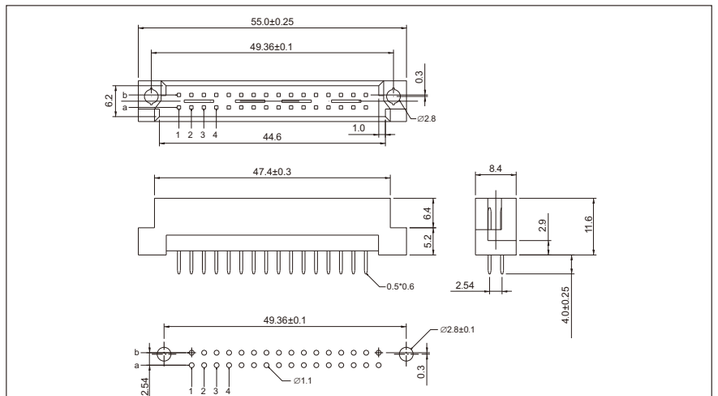

Notes: Please replace "X" with appropriate coding listed in the tables below

7 2 0 — 1 X 0 0 — X X X X — X X X

Rows of Plastic

Code	Definition
1	3 Rows
2	2 Rows

Housing Type

Code	Definition
1	Male
3	Female

Contact Plated

Code	Contact Area
1	Gold 1u"/ Light Tin
3	Gold 3u"/ Light Tin

Dim"D" & Pin deficiency

Code	Definition
20	DIP=4.0mm Straight Male

Number of contacts

Code	Definition
16	32Pin
32	32Pin
XX	xxPin

PIN Type

Code	Definition
R	Right Angle
S	Straight

Position Harpoon

Code	Definition
N	With Harpoon
Blank	No Harpoon

Mark

Code	Definition
0	No mark
Blank	Nextron mark

Note: Dimensions are shown in Millimeters .Dimensions are for reference only.

nextron®

Tel: +86-755-2605-2427 Fax: +86-755-2642-6035 Email:sales@jhjm.cc Internet: http://www.jhjm.cc

nextron®

Din41612, "Q" TYPE,FEMALE,STRAIGHT

Din41612 Series

Pitch:2.54mm/0.10"

Technical Data

Material

- Contact: Copper Alloy
- Plating: (Contact) 1.25um/ 50 u" nickel gold and tin plating see table below
- Boardlock: BRASS
- Plating: (Boardlock) 1.25um/ 50 u" nickel Ni or tin plating
- Insulator body: Glass filled polyester UL 94V-0

Electrical

- Current rating: 1.5Amp
- Contact resistance: 30mΩ max
- Insulation resistance: 1000MΩ min
- Dielection withstanding Voltage: 1000VAC RMS

Mechanical

- Operating Temperature: -40°C to 105°C
- Mating cycle: ＞400 mating cycle

Applications and Features

- Input / Output Connector
- Available in 16, 32 positions
  Other pin bits below 32 positions can be customized
- Available in plugs and receptacles
- Available molding insulation with cable after soldering
- Wave soldering process is adopted

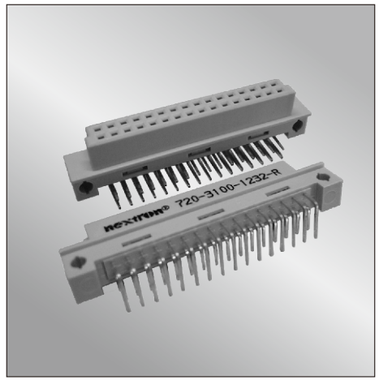

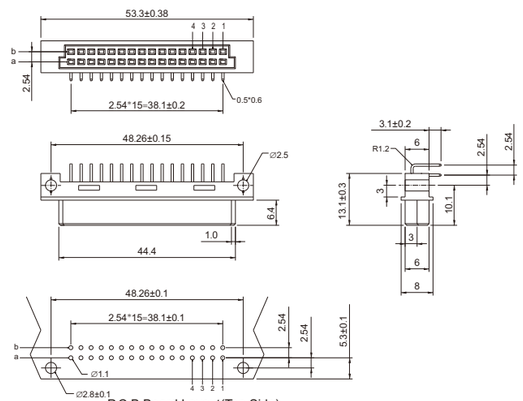

P.C.B Board Layout(Top Side)
(PCB Tolerance ±0.05)

Notes: Please replace "X" with appropriate coding listed in the tables below

7 2 0 — 3 X 0 0 — X X X X — X X X

Rows of Plastic

Code	Definition
1	3 Rows
2	2 Rows

Housing Type

Code	Definition
1	Male
3	Female

Contact Plated

Code	Contact Area
1	Gold 1u"/ Light Tin
3	Gold 3u"/ Light Tin

Dim"D" & Pin deficiency

Code	Definition
12	DIP=3.1mm Right Angle Female

Number of contacts

Code	Definition
16	32Pin
32	32Pin
XX	xxPin

PIN Type

Code	Definition
R	Right Angle
S	Straight

Position Harpoon

Code	Definition
N	With Harpoon
Blank	No Harpoon

Mark

Code	Definition
0	No mark
Blank	Nextron mark

Note: Dimensions are shown in Millimeters .Dimensions are for reference only.

nextron®

Tel: +86-755-2605-2427 Fax: +86-755-2642-6035 Email:sales@jhjm.cc Internet: http://www.jhjm.cc

nextron®

Din41612, "F" TYPE,MALE,RIGHT ANGLE

Din41612 Series

Pitch:2.54mm/0.10"

Technical Data

Material

- Contact: Copper Alloy
- Plating: (Contact) 1.25um/ 50 u" nickel gold and tin plating see table below
- Boardlock: BRASS
- Plating: (Boardlock) 1.25um/ 50 u" nickel Ni or tin plating
- Insulator body: Glass filled polyester UL 94V-0

Electrical

- Current rating: 5.6Amp
- Contact resistance: 30mΩ max
- Insulation resistance: 1000MΩ min
- Dielection withstanding Voltage: 1000VAC RMS

Mechanical

- Operating Temperature: -40°C to 105°C
- Mating cycle: ＞500 mating cycle

Applications and Features

- Input / Output Connector
- Available in 16, 32 and 48 positions
  Other pin bits below 48 position can be customized
- Available in plugs and receptacles
- Available molding insulation with cable after soldering
- Wave soldering process is adopted

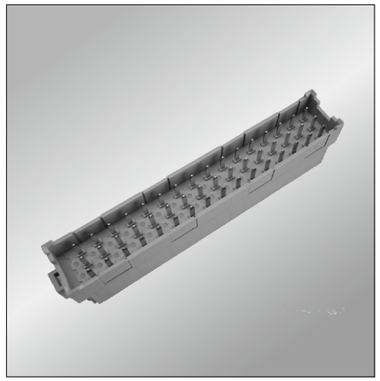

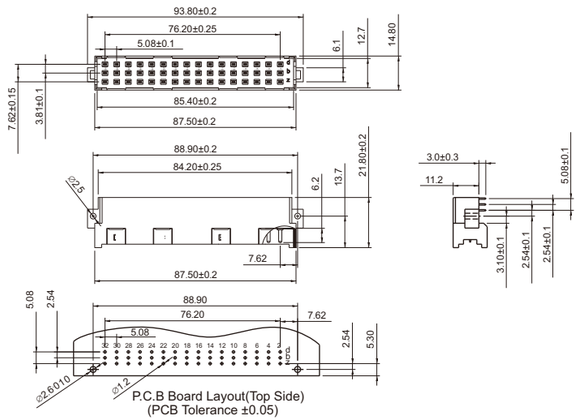

P.C.B Board Layout(Top Side)
(PCB Tolerance ±0.05)

Notes: Please replace "X" with appropriate coding listed in the tables below

7 1 0 F — 1 X 0 0 — X X X X — X X X

Rows of Plastic

Code	Definition
1	3 Rows
2	2 Rows

Housing Type

Code	Definition
1	Male
3	Female

Contact Plated

Code	Contact Area
1	Gold 1u"/ Light Tin
3	Gold 3u"/ Light Tin

Dim"D" & Pin deficiency

Code	Definition
31	DIP=3.0mm Right Angle Male

Number of contacts

Code	Definition
16	16Pin
32	32Pin
48	48Pin
XX	xxPin

PIN Type

Code	Definition
R	Right Angle
S	Straight

Position Harpoon

Code	Definition
N	With Harpoon
Blank	No Harpoon

Mark

Code	Definition
0	No mark
Blank	Nextron mark

Note: Dimensions are shown in Millimeters .Dimensions are for reference only.

nextron®

Tel: +86-755-2605-2427 Fax: +86-755-2642-6035 Email:sales@jhjm.cc Internet: http://www.jhjm.cc

nextron®

Din41612, "F" TYPE,FEMALE,STRAIGHT
Pitch:2.54mm/0.10"

Din41612 Series

Technical Data

Material

- Contact: Copper Alloy
- Plating: (Contact) 1.25um/ 50 u" nickel gold and tin plating see table below
- Boardlock: BRASS
- Plating: (Boardlock) 1.25um/ 50 u" nickel Ni or tin plating
- Insulator body: Glass filled polyester UL 94V-0

Electrical

- Current rating: 5.6Amp
- Contact resistance: 30mΩ max
- Insulation resistance: 1000MΩ min
- Dielection withstanding Voltage: 1000VAC RMS

Mechanical

- Operating Temperature: -40°C to 105°C
- Mating cycle: ＞500 mating cycle

Applications and Features

- Input / Output Connector
- Available in 16, 32 and 48 positions Other pin bits below 48 position can be customized
- Available in plugs and receptacles
- Available molding insulation with cable after soldering
- Wave soldering process is adopted

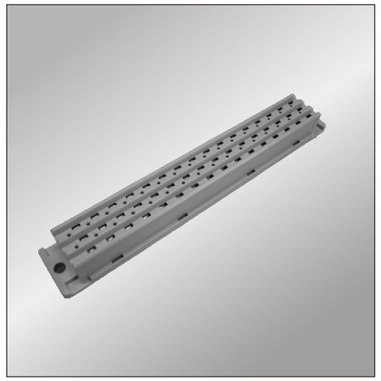

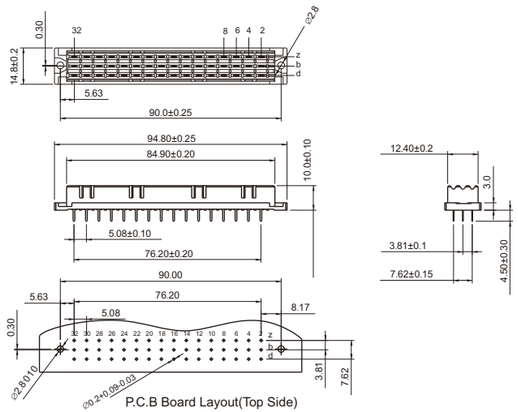

Notes: Please replace "X" with appropriate coding listed in the tables below

7 1 0 F — 3 X 0 0 — X X X X — X X X

Rows of Plastic

Code	Definition
1	3 Rows
2	2 Rows

Housing Type

Code	Definition
1	Male
3	Female

Contact Plated

Code	Contact Area
1	Gold 1u"/ Light Tin
3	Gold 3u"/ Light Tin

Dim"D" & Pin deficiency

Code	Definition
31	DIP=4.5mm STRAIGHT Female

Number of contacts

Code	Definition
16	16Pin
32	32Pin
48	48Pin
XX	xxPin

PIN Type

Code	Definition
R	Right Angle
S	Straight

Position Harpoon

Code	Definition
N	With Harpoon
Blank	No Harpoon

Mark

Code	Definition
0	No mark
Blank	Nextron mark

Note: Dimensions are shown in Millimeters .Dimensions are for reference only.

nextron®
Tel: +86-755-2605-2427 Fax: +86-755-2642-6035 Email:sales@jhjm.cc Internet: http://www.jhjm.cc

nextron®

Din41612, "F" TYPE,FEMALE,STRAIGHT
Pitch:2.54mm/0.10"

Din41612 Series

Technical Data

Material

- Contact: Copper Alloy
- Plating: (Contact) 1.25um/ 50 u" nickel gold and tin plating see table below
- Boardlock: BRASS
- Plating: (Boardlock) 1.25um/ 50 u" nickel Ni or tin plating
- Insulator body: Glass filled polyester UL 94V-0

Electrical

- Current rating: 5.6Amp
- Contact resistance: 30mΩ max
- Insulation resistance: 1000MΩ min
- Dielection withstanding Voltage: 1000VAC RMS

Mechanical

- Operating Temperature: -40°C to 105°C
- Mating cycle: ＞500 mating cycle

Applications and Features

- Input / Output Connector
- Available in 16, 32 and 48 positions Other pin bits below 48 position can be customized
- Available in plugs and receptacles
- Available molding insulation with cable after soldering
- Wave soldering process is adopted

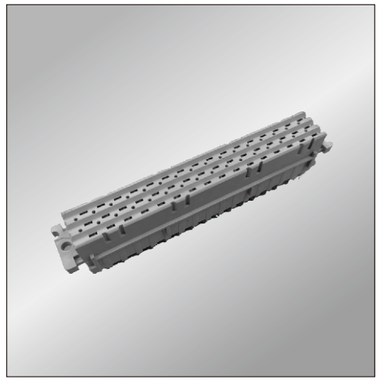

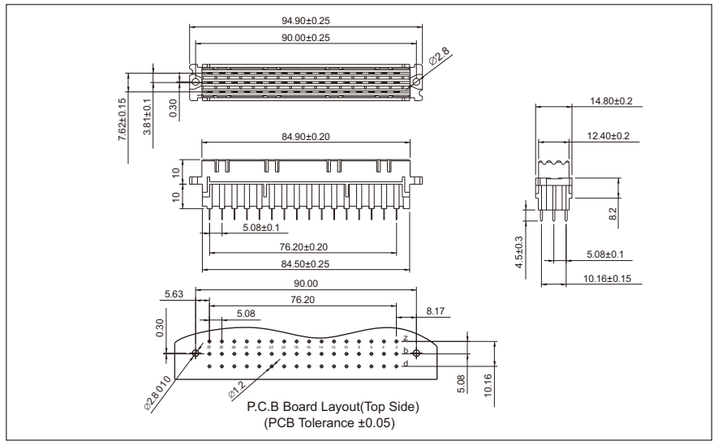

Notes: Please replace "X" with appropriate coding listed in the tables below

7 1 0 F — 3 X 0 0 — X X X X — X H X X

Rows of Plastic

Code	Definition
1	3 Rows
2	2 Rows

Housing Type

Code	Definition
1	Male
3	Female

Contact Plated

Code	Contact Area
1	Gold 1u"/ Light Tin
3	Gold 3u"/ Light Tin

Dim"D" & Pin deficiency

Code	Definition
31	DIP=4.5mm STRAIGHT Female

Number of contacts

Code	Definition
16	16Pin
32	32Pin
48	48Pin
XX	xxPin

PIN Type

Code	Definition
R	Right Angle
S	Straight

Position Harpoon

Code	Definition
N	With Harpoon
Blank	No Harpoon

Mark

Code	Definition
0	No mark
Blank	Nextron mark

Note: Dimensions are shown in Millimeters .Dimensions are for reference only.

nextron®
Tel: +86-755-2605-2427 Fax: +86-755-2642-6035 Email:sales@jhjm.cc Internet: http://www.jhjm.cc

nextron®

750 Series

Hybrid connector for signal and power supply

Pitch:6.35mm/2.54mm

Technical Data

Material

- High / Low Power Contacts: High Conductivity Copper alloy
- Plating: 1.27um/ 50 u" nickel gold and tin plating see table below
- Signal contacts: Copper alloy
- Plating: 1.27um/ 50 u" nickel gold and tin plating see table below
- Insulator body: Glass filled polyester UL 94V-0

Applications and Features

- Application:Telecom & datacom/networking equipment AC/DC Pluggable power supplies in Server System Infrastructure (SSI)-compliant server systems Industrial PCs Industrial controls & instrumentation
- Connector compatible soldering and press fit
- Recommended hole diameter of PCB press fit 1.02
- Current rating Note: Connectors are applied to test boards with 4 layers X 2 ounce copper power plane

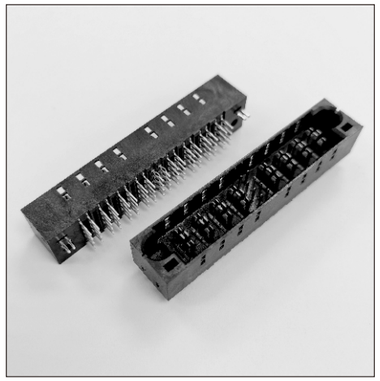

Electrical

- Current rating: High Power pin 75Amp(Single pin)
  High Power pin 60Amp(4 adjacent pin)
  Low Power pin 50Amp(Single pin)
  Low Power pin 30Amp(4 adjacent pin)
  Signal pin 3Amp
- Contact resistance: Power pin 2mΩ max
  Signal pin 20mΩ max
- Insulation resistance: Power pin 1000MΩ min
  Signal pin 500MΩ min
- Dielection Withstanding Voltage: Power pin 2500V DC
  Signal pin 1000V DC
  (1 minute)

Mechanical

- Operating Temperature: -40°C to 125°C
- Mating cycle: ⩾250 mating cycle
- Press fit retention force: Insertion 111.2N/pin max
  Retention 6.7N/pin min

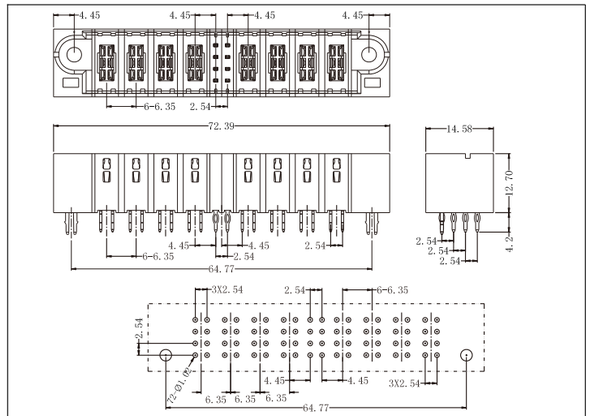

P.C.B LAYOUT

Notes: Please replace "X" with appropriate coding listed in the tables below

750 — HD — 4408 — XXAM — 100

Type / Power pin / Signal pin / Fish fork / Foot pin / Power pin Material / Contact Plated / Insulator material / Insulator color / Mark

Code	Definition
HD	Straight Head
HR	Right Head
FM	Straight Female
FR	Right Female

Code	Definition
44	4+4
A8	10+8
XX	.....

Code	Definition
08	4X2
36	4X9
XX	.....

Code	Definition
0	With
1	Without

Code	Definition
F	Press fit
S	Soldering

Code	Definition
A	High Conductivity Copper alloy

Code	Definition
M	Contact Gold 15u" /Matte-tin
N	Contact Gold 30u" /Matte-tin
J	Contact Gold 3u" /Matte-tin

Code	Definition
1	LCP

Code	Definition
0	Black

Code	Definition
0	No
1	Nextron

Note: Dimensions are shown in Millimeters .Dimensions are for reference only.

nextron®

Tel: +86-755-2605-2427 Fax: +86-755-2642-6035 Email:sales@jhjm.cc Internet: http://www.jhjm.cc

nextron®

750 Series

Hybrid connector for signal and power supply

Pitch:7.62mm

Technical Data

Material

- High / Low Power Contacts: High Conductivity Copper alloy
- Plating: 1.27um/ 50 u" nickel gold and tin plating see table below
- Signal contacts: Copper alloy
- Plating: 1.27um/ 50 u" nickel gold and tin plating see table below
- Insulator body: Glass filled polyester UL 94V-0

Applications and Features

- Application:Telecom & datacom/networking equipment AC/DC Pluggable power supplies in Server System Infrastructure (SSI)-compliant server systems Industrial PCs Industrial controls & instrumentation
- Connector compatible soldering and press fit
- Recommended hole diameter of PCB press fit 1.02
- Current rating Note: Connectors are applied to test boards with 4 layers X 2 ounce copper power plane

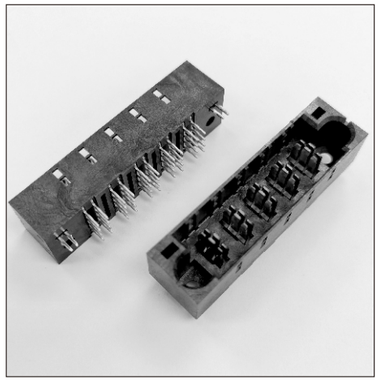

Electrical

- Current rating: High Power pin 75Amp(Single pin)
  High Power pin 60Amp(4 adjacent pin)
  Low Power pin 50Amp(Single pin)
  Low Power pin 30Amp(4 adjacent pin)
  Signal pin 3Amp
- Contact resistance: Power pin 2mΩ max
  Signal pin 20mΩ max
- Insulation resistance: Power pin 1000MΩ min
  Signal pin 500MΩ min
- Dielection Withstanding Voltage: Power pin 2500V DC
  Signal pin 1000V DC
  (1 minute)

Mechanical

- Operating Temperature: -40°C to 125°C
- Mating cycle: ⩾250 mating cycle
- Press fit retention force: Insertion 111.2N/pin max
  Retention 6.7N/pin min

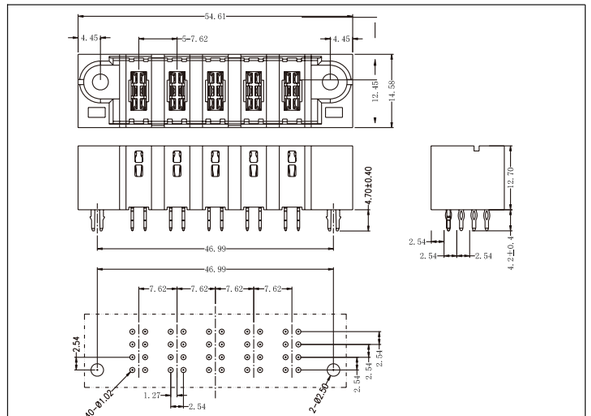

P.C.B LAYOUT

Notes: Please replace "X" with appropriate coding listed in the tables below

750 — HD — 5000 — XXAM — 100

Type / Power pin / Signal pin / Fish fork / Foot pin / Power pin Material / Contact Plated / Insulator material / Insulator color / Mark

Code	Definition
HD	Straight Head
HR	Right Head
FM	Straight Female
FR	Right Female

Code	Definition
50	5+0
A8	10+8
XX	.....

Code	Definition
00	NO
08	4X2
36	4X9
XX	.....

Code	Definition
0	With
1	Without

Code	Definition
F	Press fit
S	Soldering

Code	Definition
A	High Conductivity Copper alloy

Code	Definition
M	Contact Gold 15u" /Matte-tin
N	Contact Gold 30u" /Matte-tin
J	Contact Gold 3u" /Matte-tin

Code	Definition
1	LCP

Code	Definition
0	Black

Code	Definition
0	No
1	Nextron

Note: Dimensions are shown in Millimeters .Dimensions are for reference only.

nextron®

Tel: +86-755-2605-2427 Fax: +86-755-2642-6035 Email:sales@jhjm.cc Internet: http://www.jhjm.cc

750 Series

Hybrid connector for signal and power supply

Pitch:2.92mm/2.54mm

Technical Data

Material

- High / Low Power Contacts: High Conductivity Copper alloy
- Plating: 1.27um/ 50 u" nickel gold and tin plating see table below
- Signal contacts: Copper alloy
- Plating: 1.27um/ 50 u" nickel gold and tin plating see table below
- Insulator body: Glass filled polyester UL 94V-0

Applications and Features

- Application:Telecom & datacom/networking equipment AC/DC Pluggable power supplies in Server System Infrastructure (SSI)-compliant server systems Industrial PCs Industrial controls & instrumentation
- Connector compatible soldering and press fit
- Recommended hole diameter of PCB press fit 1.02
- Current rating Note: Connectors are applied to test boards with 4 layers X 2 ounce copper power plane

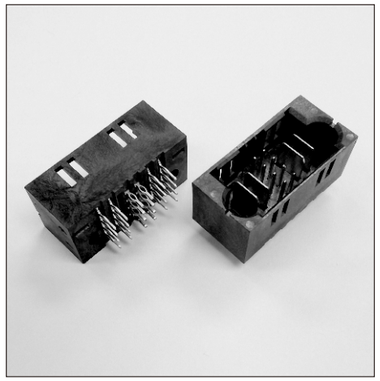

Electrical

- Current rating: Low Power pin 50Amp(Single pin)
  Low Power pin 30Amp(4 adjacent pin)
  Signal pin 3Amp
- Contact resistance: Power pin 2mΩ max
  Signal pin 20mΩ max
- Insulation resistance: Power pin 1000MΩ min
  Signal pin 500MΩ min
- Dielection Withstanding Voltage: Power pin 2500V DC
  Signal pin 1000V DC
  (1 minute)

Mechanical

- Operating Temperature: -40°C to 125°C
- Mating cycle: ⩾250 mating cycle
- Press fit retention force: Insertion 111.2N/pin max
  Retention 6.7N/pin min

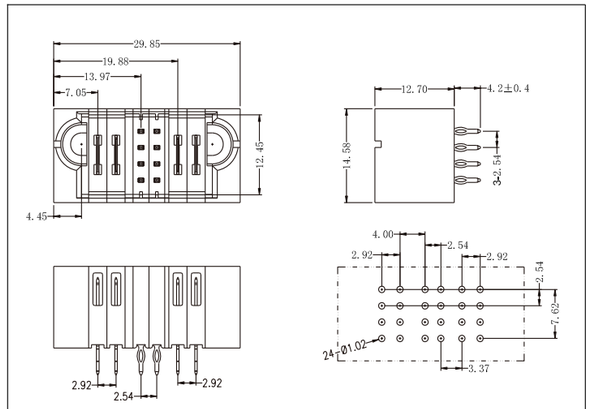

P.C.B LAYOUT

Notes: Please replace "X" with appropriate coding listed in the tables below

750 — HD — 2208 — XXAM — 100

Type		Power pin		Signal pin		Fish fork		Foot pin		Power pin Material		Contact Plated		Insulator material		Insulator color		Mark	
Code	Definition	Code	Definition	Code	Definition	Code	Definition	Code	Definition	Code	Definition	Code	Definition	Code	Definition	Code	Definition	Code	Definition
HD	Straight Head	22	2+2	08	4X2	0	With	F	Press fit	A	High Conductivity Copper alloy	M	Contact Gold 15u" /Matte-tin	1	LCP	0	Black	0	No
HR	Right Head	A8	10+8	36	4X9	1	Without	S	Soldering			N	Contact Gold 30u" /Matte-tin					1	Nextron
FM	Straight Female	XX	.....	XX	.....							J	Contact Gold 3u" /Matte-tin						
FR	Right Female																		

Note: Dimensions are shown in Millimeters .Dimensions are for reference only.

Tel: +86-755-2605-2427 Fax: +86-755-2642-6035 Email:sales@jhjm.cc Internet: http://www.jhjm.cc

750 Series

Hybrid connector for signal and power supply

Pitch:2.92mm/2.54mm

Technical Data

Material

- High / Low Power Contacts: High Conductivity Copper alloy
- Plating: 1.27um/ 50 u" nickel gold and tin plating see table below
- Signal contacts: Copper alloy
- Plating: 1.27um/ 50 u" nickel gold and tin plating see table below
- Insulator body: Glass filled polyester UL 94V-0

Applications and Features

- Application:Telecom & datacom/networking equipment AC/DC Pluggable power supplies in Server System Infrastructure (SSI)-compliant server systems Industrial PCs Industrial controls & instrumentation
- Connector compatible soldering and press fit
- Recommended hole diameter of PCB press fit 1.02
- Current rating Note: Connectors are applied to test boards with 4 layers X 2 ounce copper power plane

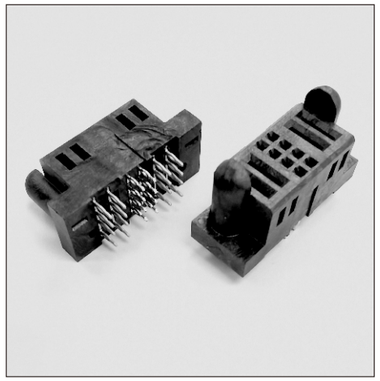

Electrical

- Current rating: Low Power pin 50Amp(Single pin)
  Low Power pin 30Amp(4 adjacent pin)
  Signal pin 3Amp
- Contact resistance: Power pin 2mΩ max
  Signal pin 20mΩ max
- Insulation resistance: Power pin 1000MΩ min
  Signal pin 500MΩ min
- Dielection Withstanding Voltage: Power pin 2500V DC
  Signal pin 1000V DC
  (1 minute)

Mechanical

- Operating Temperature: -40°C to 125°C
- Mating cycle: ⩾250 mating cycle
- Press fit retention force: Insertion 111.2N/pin max
  Retention 6.7N/pin min

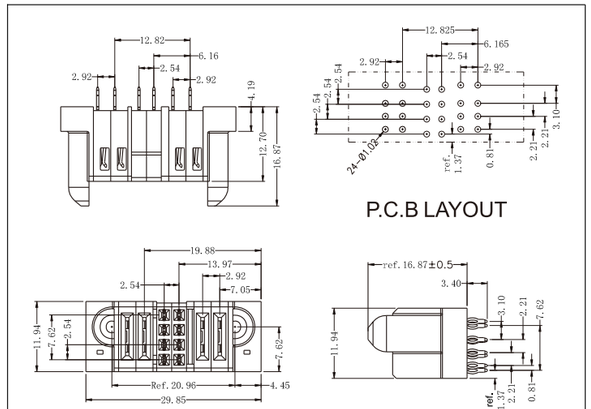

P.C.B LAYOUT

Notes: Please replace "X" with appropriate coding listed in the tables below

750 — FM — 2208 — XXAM — 100

Type		Power pin		Signal pin		Fish fork		Foot pin		Power pin Material		Contact Plated		Insulator material		Insulator color		Mark	
Code	Definition	Code	Definition	Code	Definition	Code	Definition	Code	Definition	Code	Definition	Code	Definition	Code	Definition	Code	Definition	Code	Definition
HD	Straight Head	22	2+2	08	4X2	0	With	F	Press fit	A	High Conductivity Copper alloy	M	Contact Gold 15u" /Matte-tin	1	LCP	0	Black	0	No
HR	Right Head	A8	10+8	36	4X9	1	Without	S	Soldering			N	Contact Gold 30u" /Matte-tin					1	Nextron
FM	Straight Female	XX	.....	XX	.....							J	Contact Gold 3u" /Matte-tin						
FR	Right Female																		

Note: Dimensions are shown in Millimeters .Dimensions are for reference only.

Tel: +86-755-2605-2427 Fax: +86-755-2642-6035 Email:sales@jhjm.cc Internet: http://www.jhjm.cc

nextron®

750 Series

Hybrid connector for signal and power supply

Pitch:2.92mm/2.54mm

Technical Data

Material

- High / Low Power Contacts: High Conductivity Copper alloy
- Plating: 1.27um/ 50 u" nickel gold and tin plating see table below
- Signal contacts: Copper alloy
- Plating: 1.27um/ 50 u" nickel gold and tin plating see table below
- Insulator body: Glass filled polyester UL 94V-0

Applications and Features

- Application:Telecom & datacom/networking equipment AC/DC Pluggable power supplies in Server System Infrastructure (SSI)-compliant server systems Industrial PCs Industrial controls & instrumentation
- Connector compatible soldering and press fit
- Recommended hole diameter of PCB press fit 1.02
- Current rating Note: Connectors are applied to test boards with 4 layers X 2 ounce copper power plane

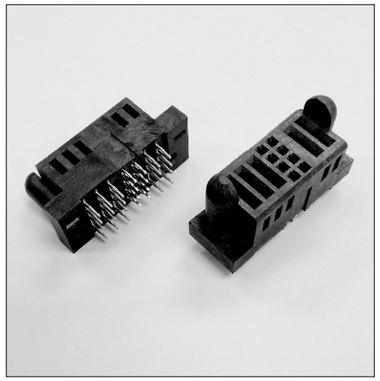

Electrical

- Current rating: Low Power pin 50Amp(Single pin)
  Low Power pin 30Amp(4 adjacent pin)
  Signal pin 3Amp
- Contact resistance: Power pin 2mΩ max
  Signal pin 20mΩ max
- Insulation resistance: Power pin 1000MΩ min
  Signal pin 500MΩ min
- Dielection Withstanding Voltage: Power pin 2500V DC
  Signal pin 1000V DC
  (1 minute)

Mechanical

- Operating Temperature: -40°C to 125°C
- Mating cycle: ⩾250 mating cycle
- Press fit retention force: Insertion 111.2N/pin max
  Retention 6.7N/pin min

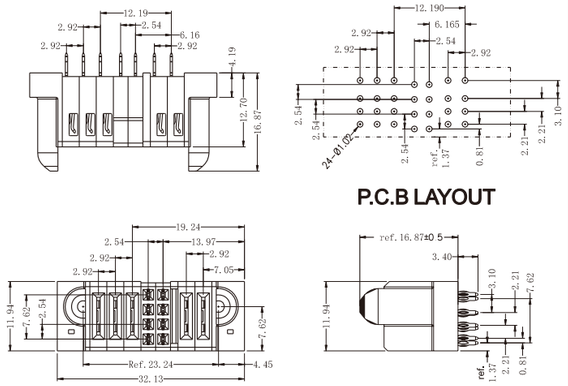

P.C.B LAYOUT

Notes: Please replace "X" with appropriate coding listed in the tables below

750 — FM — 3208 — XXAM — 100

Type | Power pin | Signal pin | Fish fork | Foot pin | Power pin Material | Contact Plated | Insulator material | Insulator color | Mark

Code	Definition	Code	Definition	Code	Definition	Code	Definition	Code	Definition	Code	Definition	Code	Definition	Code	Definition	Code	Definition	Code	Definition
HD	Straight Head	32	3+2	08	4X2	0	With	F	Press fit	A	High Conductivity Copper alloy	M	Contact Gold 15u" /Matte-tin	1	LCP	0	Black	0	No
HR	Right Head	A8	10+8	36	4X9	1	Without	S	Soldering			N	Contact Gold 30u" /Matte-tin					1	Nextron
FM	Straight Female	XX	……	XX	……							J	Contact Gold 3u" /Matte-tin						
FR	Right Female																		

Note: Dimensions are shown in Millimeters .Dimensions are for reference only.

nextron®

Tel: +86-755-2605-2427 Fax: +86-755-2642-6035 Email:sales@jhjm.cc Internet: http://www.jhjm.cc

nextron®

750 Series

Hybrid connector for signal and power supply

Pitch:6.35mm/2.54mm

Technical Data

Material

- High / Low Power Contacts: High Conductivity Copper alloy
- Plating: 1.27um/ 50 u" nickel gold and tin plating see table below
- Signal contacts: Copper alloy
- Plating: 1.27um/ 50 u" nickel gold and tin plating see table below
- Insulator body: Glass filled polyester UL 94V-0

Applications and Features

- Application:Telecom & datacom/networking equipment AC/DC Pluggable power supplies in Server System Infrastructure (SSI)-compliant server systems Industrial PCs Industrial controls & instrumentation
- Connector compatible soldering and press fit
- Recommended hole diameter of PCB press fit 1.02
- Current rating Note: Connectors are applied to test boards with 4 layers X 2 ounce copper power plane

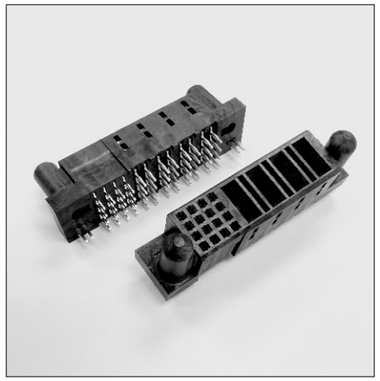

Electrical

- Current rating: High Power pin 75Amp(Single pin)
  High Power pin 60Amp(4 adjacent pin)
  Low Power pin 50Amp(Single pin)
  Low Power pin 30Amp(4 adjacent pin)
  Signal pin 3Amp
- Contact resistance: Power pin 2mΩ max
  Signal pin 20mΩ max
- Insulation resistance: Power pin 1000MΩ min
  Signal pin 500MΩ min
- Dielection Withstanding Voltage: Power pin 2500V DC
  Signal pin 1000V DC
  (1 minute)

Mechanical

- Operating Temperature: -40°C to 125°C
- Mating cycle: ⩾250 mating cycle
- Press fit retention force: Insertion 111.2N/pin max
  Retention 6.7N/pin min

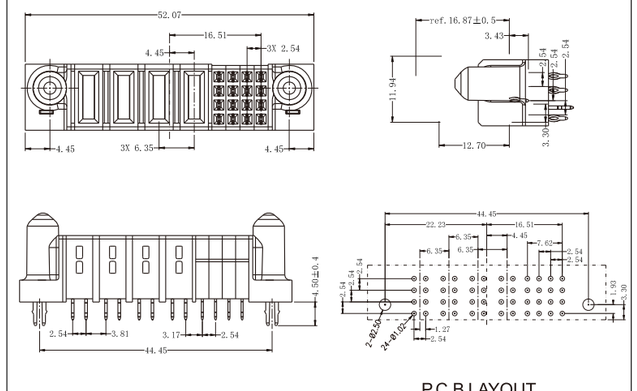

P.C.B LAYOUT

Notes: Please replace "X" with appropriate coding listed in the tables below

750 — FM — 4016 — XXAM — 100

Type | Power pin | Signal pin | Fish fork | Foot pin | Power pin Material | Contact Plated | Insulator material | Insulator color | Mark

Code	Definition	Code	Definition	Code	Definition	Code	Definition	Code	Definition	Code	Definition	Code	Definition	Code	Definition	Code	Definition	Code	Definition
HD	Straight Head	40	4+0	08	4X2	0	With	F	Press fit	A	High Conductivity Copper alloy	M	Contact Gold 15u" /Matte-tin	1	LCP	0	Black	0	No
HR	Right Head	A8	10+8	16	4X4	1	Without	S	Soldering			N	Contact Gold 30u" /Matte-tin					1	Nextron
FM	Straight Female	XX	……	XX	……							J	Contact Gold 3u" /Matte-tin						
FR	Right Female																		

Note: Dimensions are shown in Millimeters .Dimensions are for reference only.

nextron®

Tel: +86-755-2605-2427 Fax: +86-755-2642-6035 Email:sales@jhjm.cc Internet: http://www.jhjm.cc

nextron®

750 Series

Hybrid connector for signal and power supply

Pitch:5.08mm/2.54mm

Technical Data

Material

- High / Low Power Contacts: High Conductivity Copper alloy
- Plating: 1.27um/ 50 u" nickel gold and tin plating see table below
- Signal contacts: Copper alloy
- Plating: 1.27um/ 50 u" nickel gold and tin plating see table below
- Insulator body: Glass filled polyester UL 94V-0

Applications and Features

- Application:Telecom & datacom/networking equipment AC/DC Pluggable power supplies in Server System Infrastructure (SSI)-compliant server systems Industrial PCs Industrial controls & instrumentation
- Connector compatible soldering and press fit
- Recommended hole diameter of PCB press fit 1.02
- Current rating Note: Connectors are applied to test boards with 4 layers X 2 ounce copper power plane

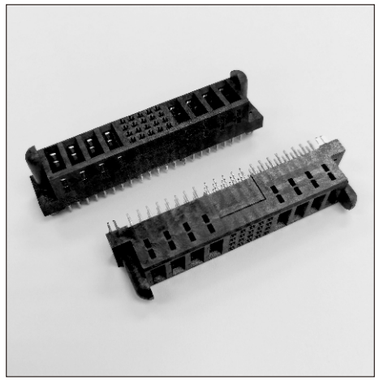

Electrical

- Current rating: High Power pin 75Amp(Single pin)
  High Power pin 60Amp(4 adjacent pin)
  Low Power pin 50Amp(Single pin)
  Low Power pin 30Amp(4 adjacent pin)
  Signal pin 3Amp
- Contact resistance: Power pin 2mΩ max
  Signal pin 20mΩ max
- Insulation resistance: Power pin 1000MΩ min
  Signal pin 500MΩ min
- Dielection Withstanding Voltage: Power pin 2500V DC
  Signal pin 1000V DC
  (1 minute)

Mechanical

- Operating Temperature: -40°C to 125°C
- Mating cycle: ⩾250 mating cycle
- Press fit retention force: Insertion 111.2N/pin max
  Retention 6.7N/pin min

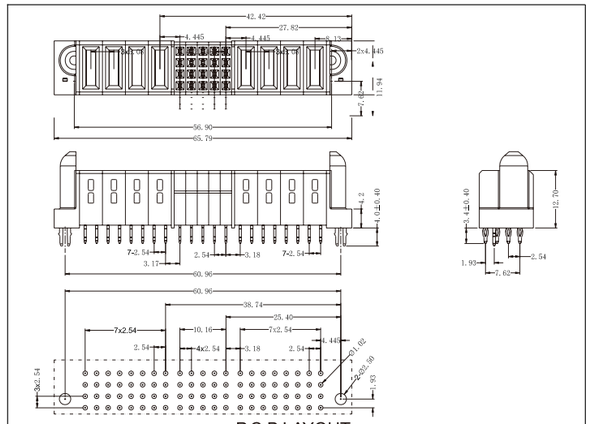

P.C.B LAYOUT

Notes: Please replace "X" with appropriate coding listed in the tables below

750 — FM — 4420 — XXAM — 100

Type | Power pin | Signal pin | Fish fork | Foot pin | Power pin Material | Contact Plated | Insulator material | Insulator color | Mark

Code	Definition	Code	Definition	Code	Definition	Code	Definition	Code	Definition	Code	Definition	Code	Definition	Code	Definition	Code	Definition	Code	Definition
HD	Straight Head	44	4+4	08	4X2	0	With	F	Press fit	A	High Conductivity Copper alloy	M	Contact Gold 15u" /Matte-tin	1	LCP	0	Black	0	No
HR	Right Head	A8	10+8	20	4X5	1	Without	S	Soldering			N	Contact Gold 30u" /Matte-tin					1	Nextron
FM	Straight Female	XX	……	XX	……							J	Contact Gold 3u" /Matte-tin						
FR	Right Female																		

Note: Dimensions are shown in Millimeters .Dimensions are for reference only.

nextron®

Tel: +86-755-2605-2427 Fax: +86-755-2642-6035 Email:sales@jhjm.cc Internet: http://www.jhjm.cc

nextron®

750 Series

Hybrid connector for signal and power supply

Pitch:2.92mm/2.54mm

Technical Data

Material

- High / Low Power Contacts: High Conductivity Copper alloy
- Plating: 1.27um/ 50 u" nickel gold and tin plating see table below
- Signal contacts: Copper alloy
- Plating: 1.27um/ 50 u" nickel gold and tin plating see table below
- Insulator body: Glass filled polyester UL 94V-0

Applications and Features

- Application:Telecom & datacom/networking equipment AC/DC Pluggable power supplies in Server System Infrastructure (SSI)-compliant server systems Industrial PCs Industrial controls & instrumentation
- Connector compatible soldering and press fit
- Recommended hole diameter of PCB press fit 1.02
- Current rating Note: Connectors are applied to test boards with 4 layers X 2 ounce copper power plane

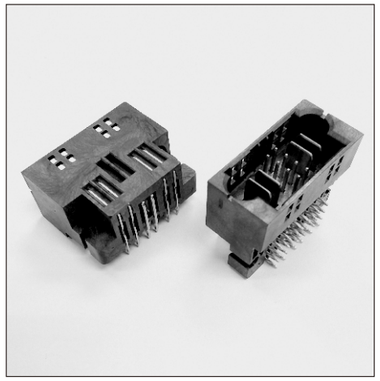

Electrical

- Current rating: Low Power pin 50Amp(Single pin)
  Low Power pin 30Amp(4 adjacent pin)
  Signal pin 3Amp
- Contact resistance: Power pin 2mΩ max
  Signal pin 20mΩ max
- Insulation resistance: Power pin 1000MΩ min
  Signal pin 500MΩ min
- Dielection Withstanding Voltage: Power pin 2500V DC
  Signal pin 1000V DC
  (1 minute)

Mechanical

- Operating Temperature: -40°C to 125°C
- Mating cycle: ⩾250 mating cycle
- Press fit retention force: Insertion 111.2N/pin max
  Retention 6.7N/pin min

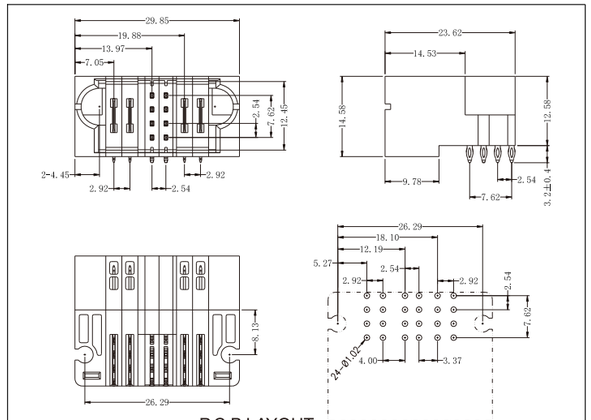

P.C.B LAYOUT

Notes: Please replace "X" with appropriate coding listed in the tables below

750 — HR — 2208 — XXAM — 100

Type | Power pin | Signal pin | Fish fork | Foot pin | Power pin Material | Contact Plated | Insulator material | Insulator color | Mark

Code	Definition	Code	Definition	Code	Definition	Code	Definition	Code	Definition	Code	Definition	Code	Definition	Code	Definition	Code	Definition	Code	Definition
HD	Straight Head	22	2+2	08	4X2	0	With	F	Press fit	A	High Conductivity Copper alloy	M	Contact Gold 15u" /Matte-tin	1	LCP	0	Black	0	No
HR	Right Head	A8	10+8	36	4X9	1	Without	S	Soldering			N	Contact Gold 30u" /Matte-tin					1	Nextron
FM	Straight Female	XX	……	XX	……							J	Contact Gold 3u" /Matte-tin						
FR	Right Female																		

Note: Dimensions are shown in Millimeters .Dimensions are for reference only.

nextron®

Tel: +86-755-2605-2427 Fax: +86-755-2642-6035 Email:sales@jhjm.cc Internet: http://www.jhjm.cc

nextron®

750 Series

Hybrid connector for signal and power supply

Pitch:2.92mm/2.54mm

Technical Data

Material

- High / Low Power Contacts: High Conductivity Copper alloy
- Plating: 1.27um/ 50 u" nickel gold and tin plating see table below
- Signal contacts: Copper alloy
- Plating: 1.27um/ 50 u" nickel gold and tin plating see table below
- Insulator body: Glass filled polyester UL 94V-0

Applications and Features

- Application:Telecom & datacom/networking equipment AC/DC Pluggable power supplies in Server System Infrastructure (SSI)-compliant server systems Industrial PCs Industrial controls & instrumentation
- Connector compatible soldering and press fit
- Recommended hole diameter of PCB press fit 1.02
- Current rating Note: Connectors are applied to test boards with 4 layers X 2 ounce copper power plane

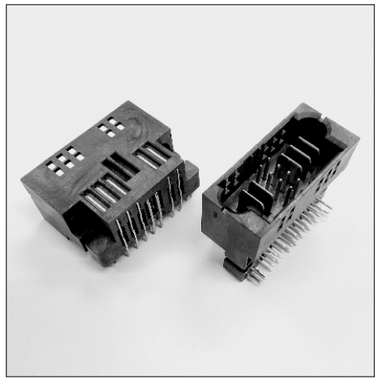

Electrical

- Current rating: Low Power pin 50Amp(Single pin)
  Low Power pin 30Amp(4 adjacent pin)
  Signal pin 3Amp
- Contact resistance: Power pin 2mΩ max
  Signal pin 20mΩ max
- Insulation resistance: Power pin 1000MΩ min
  Signal pin 500MΩ min
- Dielection Withstanding Voltage: Power pin 2500V DC
  Signal pin 1000V DC
  (1 minute)

Mechanical

- Operating Temperature: -40°C to 125°C
- Mating cycle: ⩾250 mating cycle
- Press fit retention force: Insertion 111.2N/pin max
  Retention 6.7N/pin min

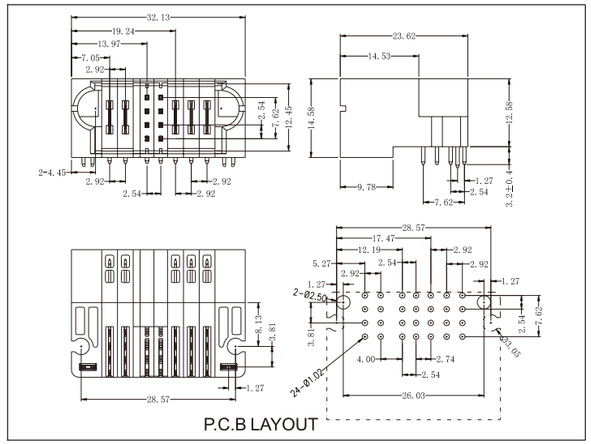

P.C.B LAYOUT

Notes: Please replace "X" with appropriate coding listed in the tables below

750 — HR — 2308 — XXAM — 100

Type | Power pin | Signal pin | Fish fork | Foot pin | Power pin Material | Contact Plated | Insulator material | Insulator color | Mark

Code	Definition	Code	Definition	Code	Definition	Code	Definition	Code	Definition	Code	Definition	Code	Definition	Code	Definition	Code	Definition	Code	Definition
HD	Straight Head	23	2+3	08	4X2	0	With	F	Press fit	A	High Conductivity Copper alloy	M	Contact Gold 15u" /Matte-tin	1	LCP	0	Black	0	No
HR	Right Head	A8	10+8	36	4X9	1	Without	S	Soldering			N	Contact Gold 30u" /Matte-tin					1	Nextron
FM	Straight Female	XX	……	XX	……							J	Contact Gold 3u" /Matte-tin						
FR	Right Female																		

Note: Dimensions are shown in Millimeters .Dimensions are for reference only.

nextron®

Tel: +86-755-2605-2427 Fax: +86-755-2642-6035 Email:sales@jhjm.cc Internet: http://www.jhjm.cc

nextron®

750 Series

Hybrid connector for signal and power supply

Pitch:6.35mm/2.54mm

Technical Data

Material

- High / Low Power Contacts: High Conductivity Copper alloy
- Plating: 1.27um/ 50 u" nickel gold and tin plating see table below
- Signal contacts: Copper alloy
- Plating: 1.27um/ 50 u" nickel gold and tin plating see table below
- Insulator body: Glass filled polyester UL 94V-0

Applications and Features

- Application:Telecom & datacom/networking equipment AC/DC Pluggable power supplies in Server System Infrastructure (SSI)-compliant server systems Industrial PCs Industrial controls & instrumentation
- Connector compatible soldering and press fit
- Recommended hole diameter of PCB press fit 1.02
- Current rating Note: Connectors are applied to test boards with 4 layers X 2 ounce copper power plane

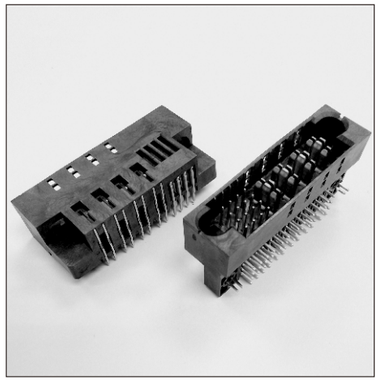

Electrical

- Current rating: High Power pin 75Amp(Single pin)
  High Power pin 60Amp(4 adjacent pin)
  Low Power pin 50Amp(Single pin)
  Low Power pin 30Amp(4 adjacent pin)
  Signal pin 3Amp
- Contact resistance: Power pin 2mΩ max
  Signal pin 20mΩ max
- Insulation resistance: Power pin 1000MΩ min
  Signal pin 500MΩ min
- Dielection Withstanding Voltage: Power pin 2500V DC
  Signal pin 1000V DC
  (1 minute)

Mechanical

- Operating Temperature: -40°C to 125°C
- Mating cycle: ⩾250 mating cycle
- Press fit retention force: Insertion 111.2N/pin max
  Retention 6.7N/pin min

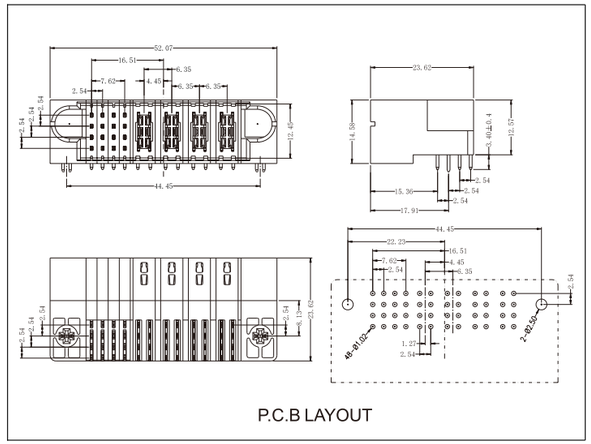

P.C.B LAYOUT

Notes: Please replace "X" with appropriate coding listed in the tables below

750 — HR — 0416 — XXAM — 100

Type | Power pin | Signal pin | Fish fork | Foot pin | Power pin Material | Contact Plated | Insulator material | Insulator color | Mark

Code	Definition	Code	Definition	Code	Definition	Code	Definition	Code	Definition	Code	Definition	Code	Definition	Code	Definition	Code	Definition	Code	Definition
HD	Straight Head	04	0+4	08	4X2	0	With	F	Press fit	A	High Conductivity Copper alloy	M	Contact Gold 15u" /Matte-tin	1	LCP	0	Black	0	No
HR	Right Head	A8	10+8	16	4X4	1	Without	S	Soldering			N	Contact Gold 30u" /Matte-tin					1	Nextron
FM	Straight Female	XX	……	XX	……							J	Contact Gold 3u" /Matte-tin						
FR	Right Female																		

Note: Dimensions are shown in Millimeters .Dimensions are for reference only.

nextron®

Tel: +86-755-2605-2427 Fax: +86-755-2642-6035 Email:sales@jhjm.cc Internet: http://www.jhjm.cc

nextron®

750 Series

Hybrid connector for signal and power supply

Pitch:5.08mm/2.54mm

Technical Data

Material

- High / Low Power Contacts: High Conductivity Copper alloy
- Plating: 1.27um/ 50 u" nickel gold and tin plating see table below
- Signal contacts: Copper alloy
- Plating: 1.27um/ 50 u" nickel gold and tin plating see table below
- Insulator body: Glass filled polyester UL 94V-0

Applications and Features

- Application:Telecom & datacom/networking equipment AC/DC Pluggable power supplies in Server System Infrastructure (SSI)-compliant server systems Industrial PCs Industrial controls & instrumentation
- Connector compatible soldering and press fit
- Recommended hole diameter of PCB press fit 1.02
- Current rating Note: Connectors are applied to test boards with 4 layers X 2 ounce copper power plane

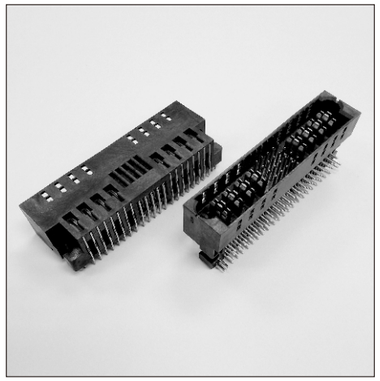

Electrical

- Current rating: High Power pin 75Amp(Single pin)
  High Power pin 60Amp(4 adjacent pin)
  Low Power pin 50Amp(Single pin)
  Low Power pin 30Amp(4 adjacent pin)
  Signal pin 3Amp
- Contact resistance: Power pin 2mΩ max
  Signal pin 20mΩ max
- Insulation resistance: Power pin 1000MΩ min
  Signal pin 500MΩ min
- Dielection Withstanding Voltage: Power pin 2500V DC
  Signal pin 1000V DC
  (1 minute)

Mechanical

- Operating Temperature: -40°C to 125°C
- Mating cycle: ⩾250 mating cycle
- Press fit retention force: Insertion 111.2N/pin max
  Retention 6.7N/pin min

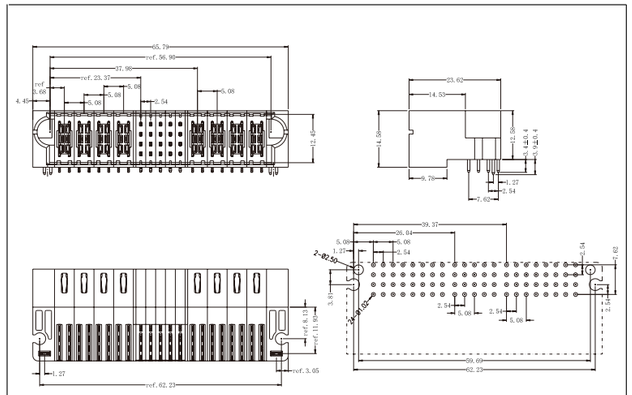

P.C.B LAYOUT

Notes: Please replace "X" with appropriate coding listed in the tables below

750 — HR — 4420 — XXAM — 100

Type | Power pin | Signal pin | Fish fork | Foot pin | Power pin Material | Contact Plated | Insulator material | Insulator color | Mark

Code	Definition	Code	Definition	Code	Definition	Code	Definition	Code	Definition	Code	Definition	Code	Definition	Code	Definition	Code	Definition	Code	Definition
HD	Straight Head	44	4+4	08	4X2	0	With	F	Press fit	A	High Conductivity Copper alloy	M	Contact Gold 15u" /Matte-tin	1	LCP	0	Black	0	No
HR	Right Head	A8	10+8	20	4X5	1	Without	S	Soldering			N	Contact Gold 30u" /Matte-tin					1	Nextron
FM	Straight Female	XX	.....	XX	.....							J	Contact Gold 3u" /Matte-tin						
FR	Right Female																		

Note: Dimensions are shown in Millimeters .Dimensions are for reference only.

nextron®

Tel: +86-755-2605-2427 Fax: +86-755-2642-6035 Email:sales@jhjm.cc Internet: http://www.jhjm.cc

nextron®

750 Series

Hybrid connector for signal and power supply

Pitch:6.35mm/2.54mm

Technical Data

Material

- High / Low Power Contacts: High Conductivity Copper alloy
- Plating: 1.27um/ 50 u" nickel gold and tin plating see table below
- Signal contacts: Copper alloy
- Plating: 1.27um/ 50 u" nickel gold and tin plating see table below
- Insulator body: Glass filled polyester UL 94V-0

Applications and Features

- Application:Telecom & datacom/networking equipment AC/DC Pluggable power supplies in Server System Infrastructure (SSI)-compliant server systems Industrial PCs Industrial controls & instrumentation
- Connector compatible soldering and press fit
- Recommended hole diameter of PCB press fit 1.02
- Current rating Note: Connectors are applied to test boards with 4 layers X 2 ounce copper power plane

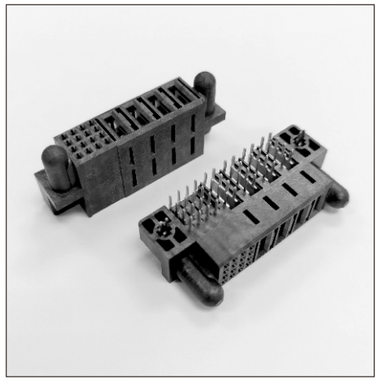

Electrical

- Current rating: High Power pin 75Amp(Single pin)
  High Power pin 60Amp(4 adjacent pin)
  Low Power pin 50Amp(Single pin)
  Low Power pin 30Amp(4 adjacent pin)
  Signal pin 3Amp
- Contact resistance: Power pin 2mΩ max
  Signal pin 20mΩ max
- Insulation resistance: Power pin 1000MΩ min
  Signal pin 500MΩ min
- Dielection Withstanding Voltage: Power pin 2500V DC
  Signal pin 1000V DC
  (1 minute)

Mechanical

- Operating Temperature: -40°C to 125°C
- Mating cycle: ⩾250 mating cycle
- Press fit retention force: Insertion 111.2N/pin max
  Retention 6.7N/pin min

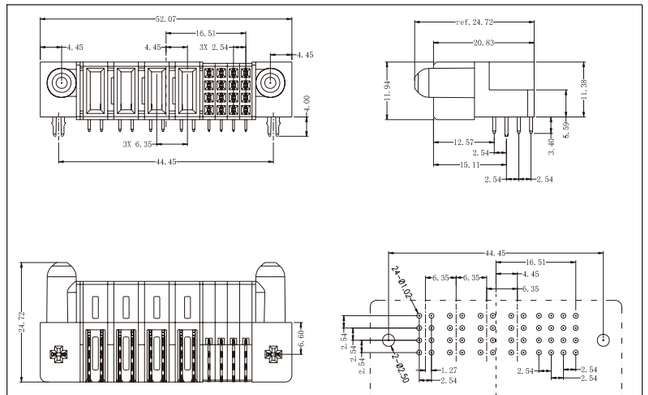

P.C.B LAYOUT

Notes: Please replace "X" with appropriate coding listed in the tables below

750 — FR — 4016 — XXAM — 100

Type | Power pin | Signal pin | Fish fork | Foot pin | Power pin Material | Contact Plated | Insulator material | Insulator color | Mark

Code	Definition	Code	Definition	Code	Definition	Code	Definition	Code	Definition	Code	Definition	Code	Definition	Code	Definition	Code	Definition	Code	Definition
HD	Straight Head	40	4+0	08	4X2	0	With	F	Press fit	A	High Conductivity Copper alloy	M	Contact Gold 15u" /Matte-tin	1	LCP	0	Black	0	No
HR	Right Head	A8	10+8	16	4X4	1	Without	S	Soldering			N	Contact Gold 30u" /Matte-tin					1	Nextron
FM	Straight Female	XX	.....	XX	.....							J	Contact Gold 3u" /Matte-tin						
FR	Right Female																		

Note: Dimensions are shown in Millimeters .Dimensions are for reference only.

nextron®

Tel: +86-755-2605-2427 Fax: +86-755-2642-6035 Email:sales@jhjm.cc Internet: http://www.jhjm.cc

750 Series

Hybrid connector for signal and power supply
Pitch:2.92mm/2.54mm

Technical Data

Material

- High / Low Power Contacts: High Conductivity Copper alloy
- Plating: 1.27um/ 50 u" nickel gold and tin plating see table below
- Signal contacts: Copper alloy
- Plating: 1.27um/ 50 u" nickel gold and tin plating see table below
- Insulator body: Glass filled polyester UL 94V-0

Applications and Features

- Application:Telecom & datacom/networking equipment AC/DC Pluggable power supplies in Server System Infrastructure (SSI)-compliant server systems Industrial PCs Industrial controls & instrumentation
- Connector compatible soldering and press fit
- Recommended hole diameter of PCB press fit 1.02
- Current rating Note: Connectors are applied to test boards with 4 layers X 2 ounce copper power plane

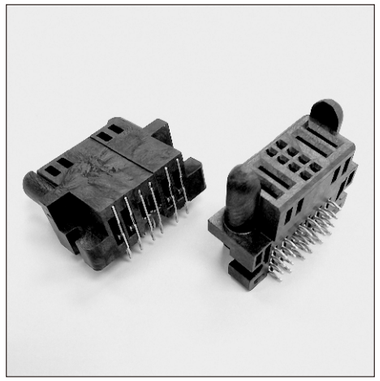

Electrical

- Current rating: Low Power pin 50Amp(Single pin)
  Low Power pin 30Amp(4 adjacent pin)
  Signal pin 3Amp
- Contact resistance: Power pin 2mΩ max
  Signal pin 20mΩ max
- Insulation resistance: Power pin 1000MΩ min
  Signal pin 500MΩ min
- Dielection Withstanding Voltage: Power pin 2500V DC
  Signal pin 1000V DC
  (1 minute)

Mechanical

- Operating Temperature: -40°C to 125°C
- Mating cycle: ⩾250 mating cycle
- Press fit retention force: Insertion 111.2N/pin max
  Retention 6.7N/pin min

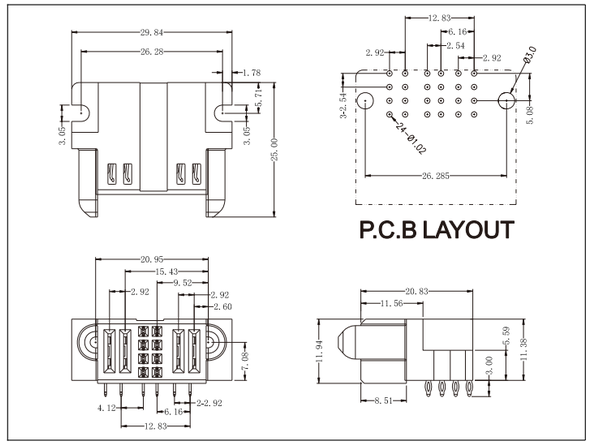

Notes: Please replace "X" with appropriate coding listed in the tables below

7 5 0 — F R — 2 2 0 8 — X X A M — 1 0 0

Type | Power pin | Signal pin | Fish fork | Foot pin | Power pin Material | Contact Plated | Insulator material | Insulator color | Mark

Code	Definition	Code	Definition	Code	Definition	Code	Definition	Code	Definition	Code	Definition	Code	Definition	Code	Definition	Code	Definition	Code	Definition
HD	Straight Head	22	2+2	08	4X2	0	With	F	Press fit	A	High Conductivity Copper alloy	M	Contact Gold 15u" /Matte-tin	1	LCP	0	Black	0	No
HR	Right Head	A8	10+8	36	4X9	1	Without	S	Soldering			N	Contact Gold 30u" /Matte-tin					1	Nextron
FM	Straight Female	XX	.....	XX	.....							J	Contact Gold 3u" /Matte-tin						
FR	Right Female																		

Note: Dimensions are shown in Millimeters .Dimensions are for reference only.

Tel: +86-755-2605-2427 Fax: +86-755-2642-6035 Email:sales@jhjm.cc Internet: http://www.jhjm.cc

750 Series

Hybrid connector for signal and power supply
Pitch5.08mm/2.54mm

Technical Data

Material

- High / Low Power Contacts: High Conductivity Copper alloy
- Plating: 1.27um/ 50 u" nickel gold and tin plating see table below
- Signal contacts: Copper alloy
- Plating: 1.27um/ 50 u" nickel gold and tin plating see table below
- Insulator body: Glass filled polyester UL 94V-0

Applications and Features

- Application:Telecom & datacom/networking equipment AC/DC Pluggable power supplies in Server System Infrastructure (SSI)-compliant server systems Industrial PCs Industrial controls & instrumentation
- Connector compatible soldering and press fit
- Recommended hole diameter of PCB press fit 1.02
- Current rating Note: Connectors are applied to test boards with 8 layers X 2 ounce copper power plane

Electrical

- Current rating: High Power pin 75Amp(Single pin)
  High Power pin 60Amp(4 adjacent pin)
  Low Power pin 50Amp(Single pin)
  Low Power pin 30Amp(4 adjacent pin)
  Signal pin 3Amp
- Contact resistance: Power pin 2mΩ max
  Signal pin 20mΩ max
- Insulation resistance: Power pin 1000MΩ min
  Signal pin 500MΩ min
- Dielection withstanding Voltage: Power pin 2500V DC
  Signal pin 1000V DC
  (1 minute)

Mechanical

- Operating Temperature: -40°C to 125°C
- Mating cycle: ≥250 mating cycle
- Press fit retention force: Insertion 111.2N/pin max
  Retention 6.7N/pin min

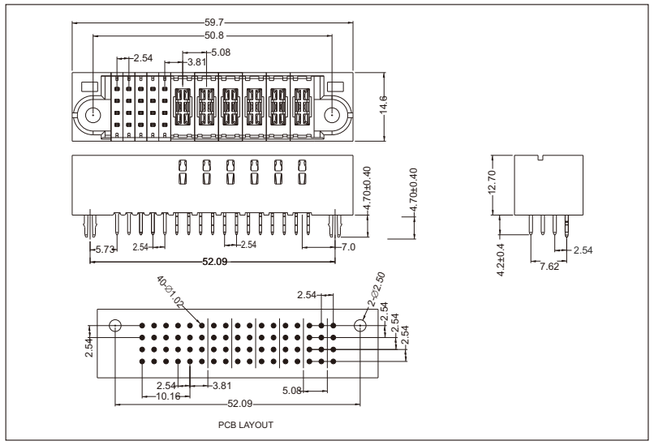

Notes: Please replace "X" with appropriate coding listed in the tables below

7 5 0 — H D — 0 6 2 0 — X X A M — 1 0 0

Type | Power pin | Signal pin | Fish fork | Foot pin | Power pin Material | Contact Plated | Insulator material | Insulator color | Mark

Code	Definition	Code	Definition	Code	Definition	Code	Definition	Code	Definition	Code	Definition	Code	Definition	Code	Definition	Code	Definition	Code	Definition
HD	Straight Head	44	4+4	08	4X2	0	With	F	Press fit	A	High Conductivity Copper alloy	M	Contact Gold 15u" /Matte-tin	1	LCP	0	Black	0	No
HR	Right Head	A8	10+8	36	4X9	1	Without	S	Soldering			N	Contact Gold 30u" /Matte-tin					1	Nextron
FM	Straight Female	XX	.....	XX	.....							J	Contact Gold 3u" /Matte-tin						
FR	Right Female																		

Note: Dimensions are shown in Millimeters .Dimensions are for reference only.

Tel: +86-755-2605-2427 Fax: +86-755-2642-6035 Email:sales@jhjm.cc Internet: http://www.jhjm.cc

nextron®

750 Series

Hybrid connector for signal and power supply
Pitch:5.08mm/2.54mm

Technical Data

Material

- High / Low Power Contacts: High Conductivity Copper alloy
- Plating: 1.27um/ 50 u" nickel gold and tin plating see table below
- Signal contacts: Copper alloy
- Plating: 1.27um/ 50 u" nickel gold and tin plating see table below
- Insulator body: Glass filled polyester UL 94V-0

Applications and Features

- Application:Telecom & datacom/networking equipment AC/DC Pluggable power supplies in Server System Infrastructure (SSI)-compliant server systems Industrial PCs Industrial controls & instrumentation
- Connector compatible soldering and press fit
- Recommended hole diameter of PCB press fit 1.02
- Current rating Note: Connectors are applied to test boards with 8 layers X 2 ounce copper power plane

Electrical

- Current rating: High Power pin 75Amp(Single pin) High Power pin 60Amp(4 adjacent pin) Low Power pin 50Amp(Single pin) Low Power pin 30Amp(4 adjacent pin) Signal pin 3Amp
- Contact resistance: Power pin 2mΩ max Signal pin 20mΩ max
- Insulation resistance: Power pin 1000MΩ min Signal pin 500MΩ min
- Dielection withstanding Voltage: Power pin 2500V DC Signal pin 1000V DC (1 minute)

Mechanical

- Operating Temperature: -40°C to 125°C
- Mating cycle: ≥250 mating cycle
- Press fit retention force: Insertion 111.2N/pin max Retention 6.7N/pin min

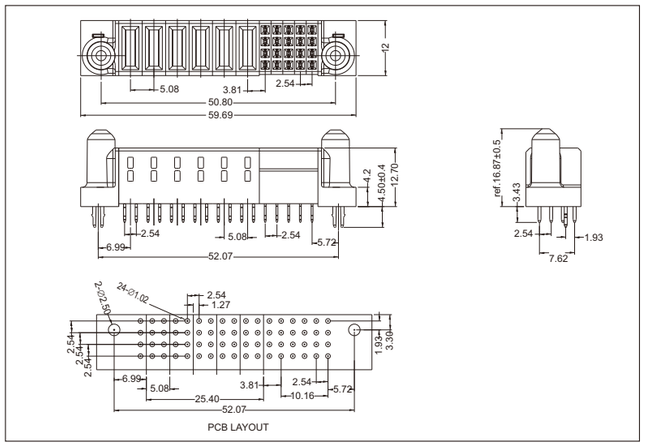

PCB LAYOUT

Notes: Please replace "X" with appropriate coding listed in the tables below

7 5 0 — F M — 6 0 2 0 — X X A M — 1 0 0

Type | Power pin | Signal pin | Fish fork | Foot pin | Power pin Material | Contact Plated | Insulator material | Insulator color | Mark

Code	Definition
HD	Straight Head
HR	Right Head
FM	Straight Female
FR	Right Female

Code	Definition
44	4+4
A8	10+8
XX	.....

Code	Definition
08	4X2
20	4X5
XX	.....

Code	Definition
0	With
1	Without

Code	Definition
F	Press fit
S	Soldering

Code	Definition
A	High Conductivity Copper alloy

Code	Definition
M	Contact Gold 15u" /Matte-tin
N	Contact Gold 30u" /Matte-tin
J	Contact Gold 3u" /Matte-tin

Code	Definition
1	LCP

Code	Definition
0	Black

Code	Definition
0	No
1	Nextron

Note: Dimensions are shown in Millimeters .Dimensions are for reference only.

nextron®
Tel: +86-755-2605-2427 Fax: +86-755-2642-6035 Email:sales@jhjm.cc Internet: http://www.jhjm.cc

nextron®

750 Series

Hybrid connector for signal and power supply
Pitch:5.08mm

Technical Data

Material

- High / Low Power Contacts: High Conductivity Copper alloy
- Plating: 1.27um/ 50 u" nickel gold and tin plating see table below
- Signal contacts: Copper alloy
- Plating: 1.27um/ 50 u" nickel gold and tin plating see table below
- Insulator body: Glass filled polyester UL 94V-0

Applications and Features

Application and Features

- Application:Telecom & datacom/networking equipment AC/DC Pluggable power supplies in Server System Infrastructure (SSI)-compliant server systems Industrial PCs Industrial controls & instrumentation
- Connector compatible soldering and press fit
- Recommended hole diameter of PCB press fit 1.02
- Current rating Note: Connectors are applied to test boards with 8 layers X 2 ounce copper power plane

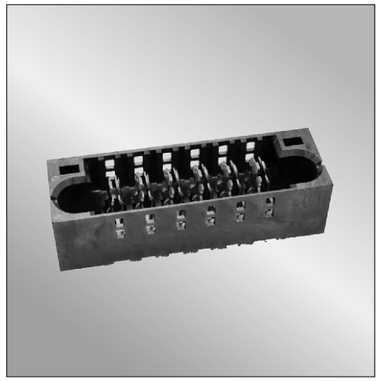

Electrical

- Current rating: High Power pin 75Amp(Single pin) High Power pin 60Amp(4 adjacent pin) Low Power pin 50Amp(Single pin) Low Power pin 30Amp(4 adjacent pin) Signal pin 3Amp
- Contact resistance: Power pin 2mΩ max Signal pin 20mΩ max
- Insulation resistance: Power pin 1000MΩ min Signal pin 500MΩ min
- Dielection withstanding Voltage: Power pin 2500V DC Signal pin 1000V DC (1 minute)

Mechanical

- Operating Temperature: -40°C to 125°C
- Mating cycle: ≥250 mating cycle
- Press fit retention force: Insertion 111.2N/pin max Retention 6.7N/pin min

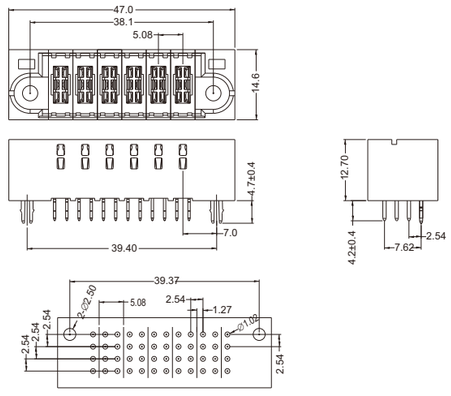

PCB LAYOUT

Notes: Please replace "X" with appropriate coding listed in the tables below

7 5 0 — H D — 6 0 0 0 — X X A M — 1 0 0

Type | Power pin | Signal pin | Fish fork | Foot pin | Power pin Material | Contact Plated | Insulator material | Insulator color | Mark

Code	Definition
HD	Straight Head
HR	Right Head
FM	Straight Female
FR	Right Female

Code	Definition
50	5+0
A8	10+8
XX	.....

Code	Definition
00	NO
08	4X2
36	4X9
XX	.....

Code	Definition
0	With
1	Without

Code	Definition
F	Press fit
S	Soldering

Code	Definition
A	High Conductivity Copper alloy

Code	Definition
M	Contact Gold 15u" /Matte-tin
N	Contact Gold 30u" /Matte-tin
J	Contact Gold 3u" /Matte-tin

Code	Definition
1	LCP

Code	Definition
0	Black

Code	Definition
0	No
1	Nextron

Note: Dimensions are shown in Millimeters .Dimensions are for reference only.

nextron®
Tel: +86-755-2605-2427 Fax: +86-755-2642-6035 Email:sales@jhjm.cc Internet: http://www.jhjm.cc

nextron®

750 Series

Hybrid connector for signal and power supply
Pitch:5.08mm/0.20"

Technical Data

Material

- High / Low Power Contacts: High Conductivity Copper alloy
- Plating: 1.27um/ 50 u" nickel gold and tin plating see table below
- Signal contacts: Copper alloy
- Plating: 1.27um/ 50 u" nickel gold and tin plating see table below
- Insulator body: Glass filled polyester UL 94V-0

Electrical

- Current rating: High Power pin 75Amp(Single pin) High Power pin 60Amp(4 adjacent pin) Low Power pin 50Amp(Single pin) Low Power pin 30Amp(4 adjacent pin) Signal pin 3Amp
- Contact resistance: Power pin 2mΩ max Signal pin 20mΩ max
- Insulation resistance: Power pin 1000MΩ min Signal pin 500MΩ min
- Dielection withstanding Voltage: Power pin 2500V DC Signal pin 1000V DC (1 minute)

Mechanical

- Operating Temperature: -40°C to 125°C
- Mating cycle: ≥250 mating cycle
- Press fit retention force: Insertion 111.2N/pin max Retention 6.7N/pin min

Applications and Features

- Application:Telecom & datacom/networking equipment AC/DC Pluggable power supplies in Server System Infrastructure (SSI)-compliant server systems Industrial PCs Industrial controls & instrumentation
- Connector compatible soldering and press fit
- Recommended hole diameter of PCB press fit 1.02
- Current rating Note: Connectors are applied to test boards with 8 layers X 2 ounce copper power plane

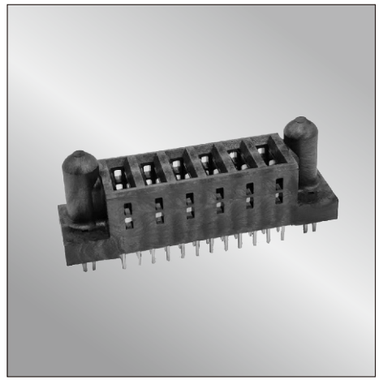

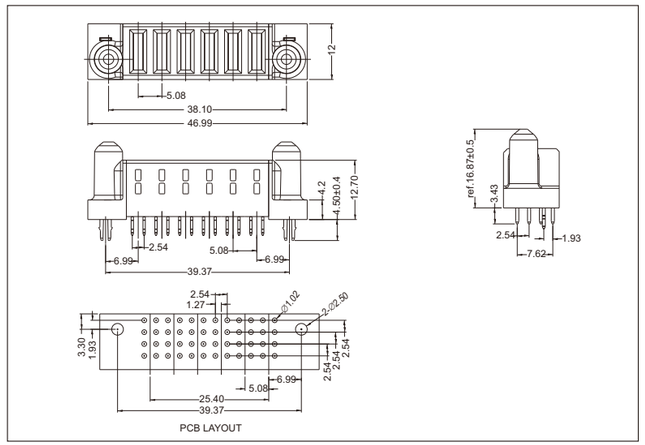

Notes: Please replace "X" with appropriate coding listed in the tables below

7 5 0 — F M — 6 0 0 0 — X X A M — 1 0 0

Type | Power pin | Signal pin | Fish fork | Foot pin | Power pin Material | Contact Plated | Insulator material | Insulator color | Mark

Code	Definition
HD	Straight Head
HR	Right Head
FM	Straight Female
FR	Right Female

Code	Definition
44	4+4
A8	10+8
XX	.....

Code	Definition
08	4X2
20	4X5
XX	.....

Code	Definition
0	With
1	Without

Code	Definition
F	Press fit
S	Soldering

Code	Definition
A	High Conductivity Copper alloy

Code	Definition
M	Contact Gold 15u" /Matte-tin
N	Contact Gold 30u" /Matte-tin
J	Contact Gold 3u" /Matte-tin

Code	Definition
1	LCP

Code	Definition
0	Black

Code	Definition
0	No
1	Nextron

Note: Dimensions are shown in Millimeters .Dimensions are for reference only.

nextron®

Tel: +86-755-2605-2427 Fax: +86-755-2642-6035 Email:sales@jhjm.cc Internet: http://www.jhjm.cc
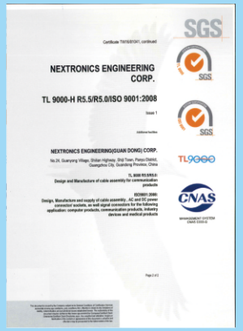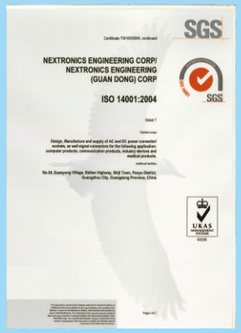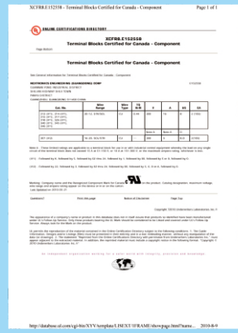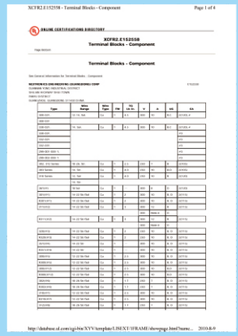
nextron® 認證證書